runners®

multirail™

The multirail™ system from Runners have been carefully developed to provide effective runway solutions for hundreds of applications including spraybooths, material handling, production lines, abattoirs etc., the possibilities are endless.

Key Features

- Limitless configurations available
- Smooth running in operation
- Simple to design and install
- Maintenance Free

Benefits

- Highest quality components
- Improves operational efficiency
- Economical, time saving investment
- Full technical support

Contact our knowledgeable and friendly staff will be more than happy to talk you through any technical or specification questions you may have

01280 822288 | sales@runners-sales.com

multirail™

runners®

Track

The Multirail™ system is ideally suited to more complex layouts which may incorporate turntables and junctions. The wide range of hangers and support brackets makes Multirail™ a very flexible option for virtually any application.

Straight Track

Tubular Steel Track
Max capacity: 400kg per metre

Length	Part No.
3 metre	88-400-3
4 metre	88-400-4
5 metre	88-400-5
6 metre	88-400-6

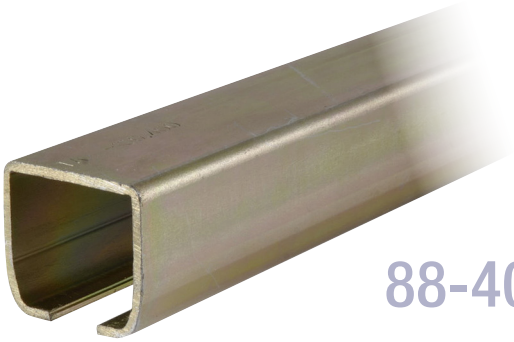

88-400

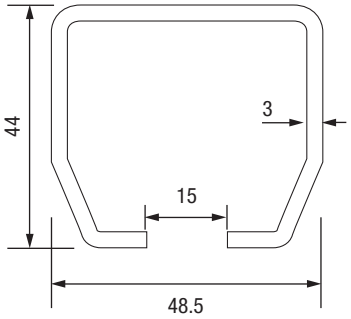

Bends

Tubular Steel Track Bend
Total linear length: 2 metres

Angle	Part No.
90°	88-424
45°	88-425
30°	88-426

All dimensions are in mm

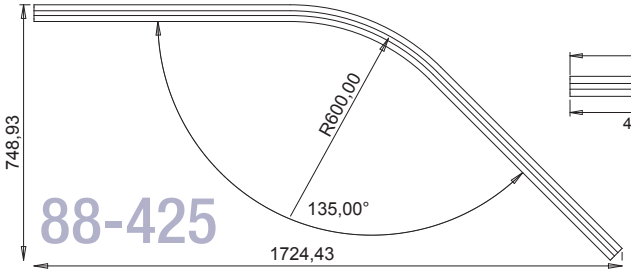

88-425

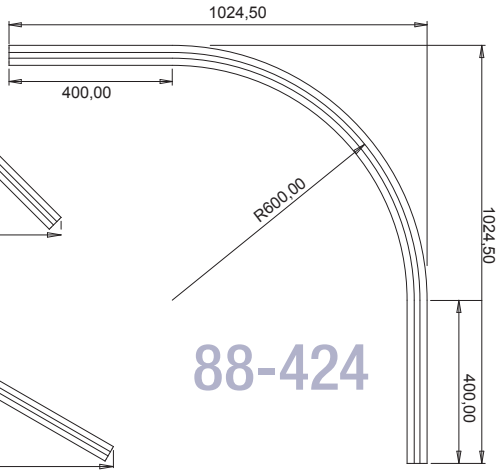

88-424

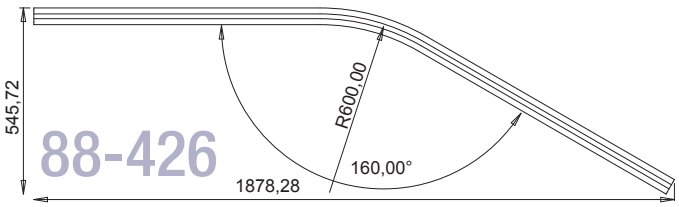

88-426

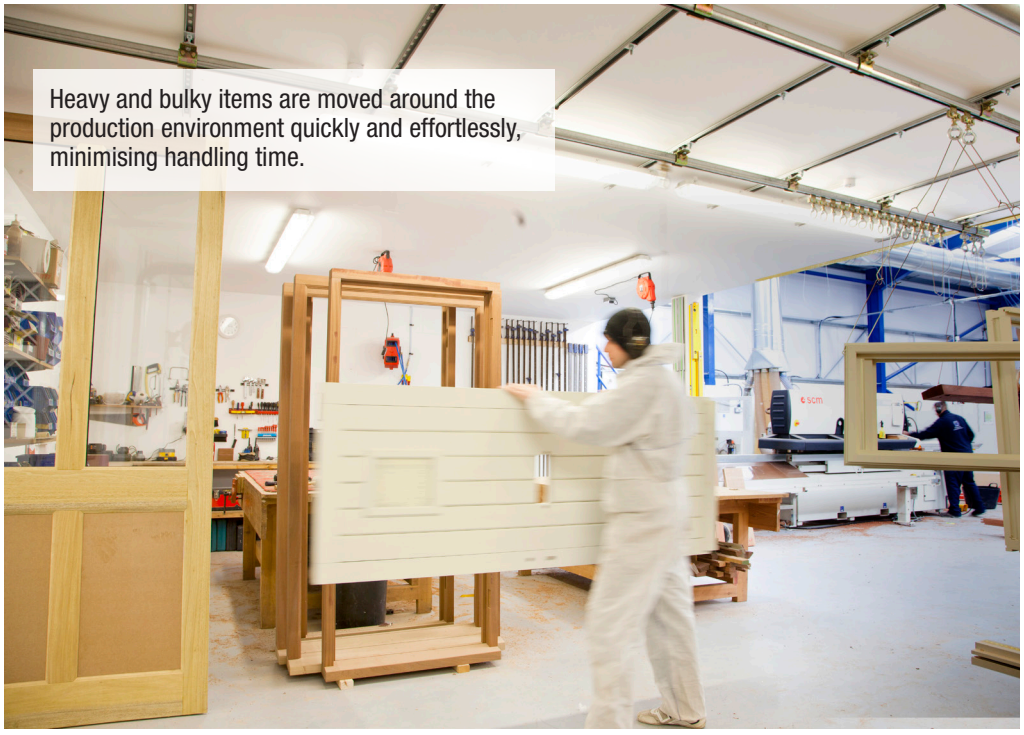

Heavy and bulky items are moved around the production environment quickly and effortlessly, minimising handling time.

Contact our knowledgeable and friendly staff will be more than happy to talk you through any technical or specification questions you may have

01280 822288 | sales@runners-sales.com

multirail™

runners®

Track Switches

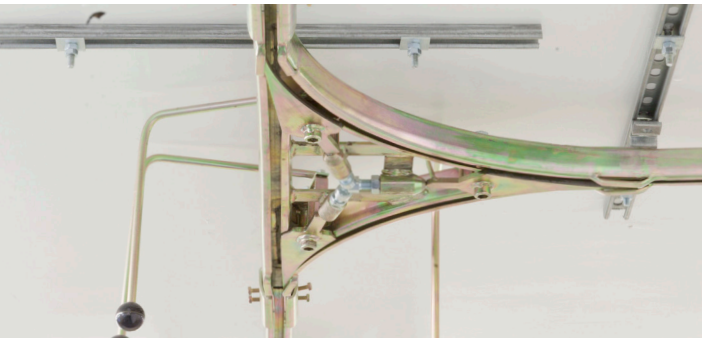

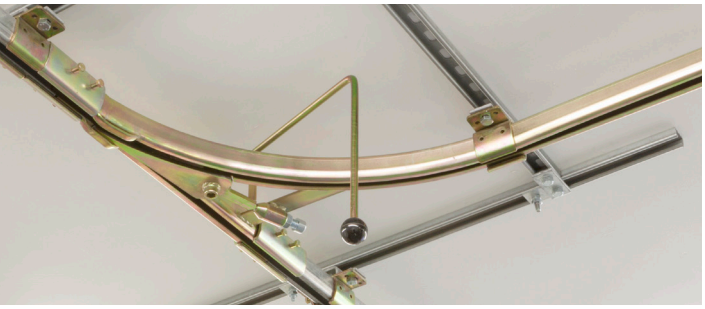

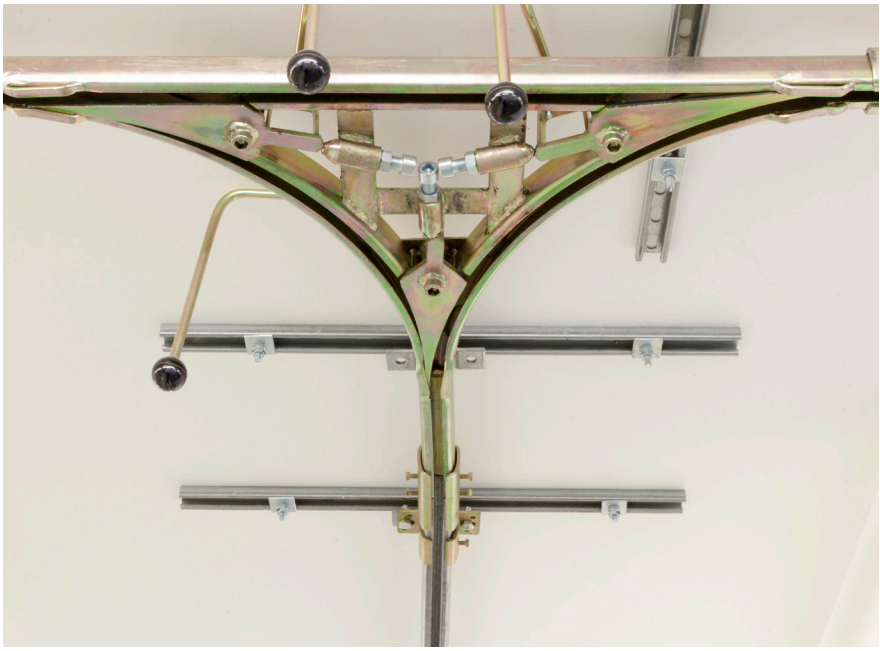

All switches are supplied complete with operating levers as shown in photo.

One Direction Change

90°

Direction	Part No.
Left	88-453
Right	88-454

45°

Direction	Part No.
Left	88-494
Right	88-495

30°

Direction	Part No.
Left	88-492
Right	88-493

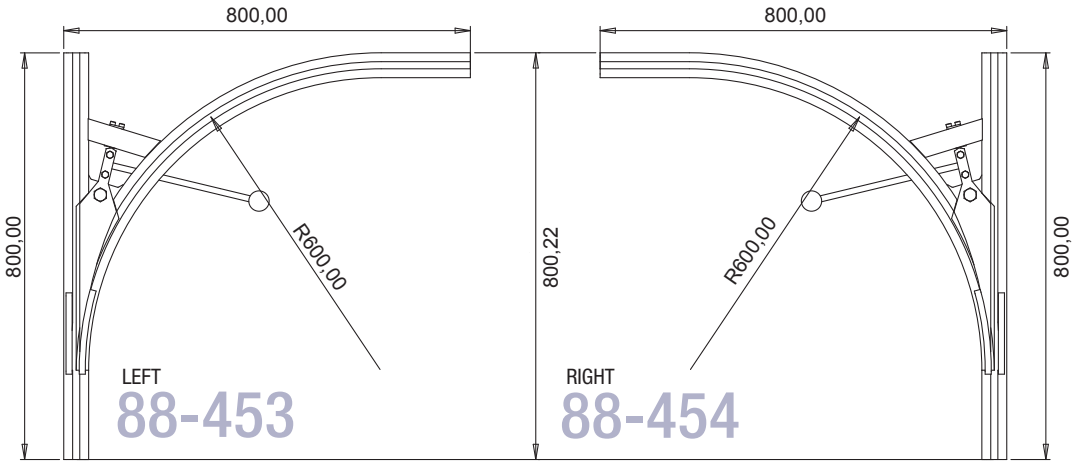

Viewed from underneath

All dimensions are in mm

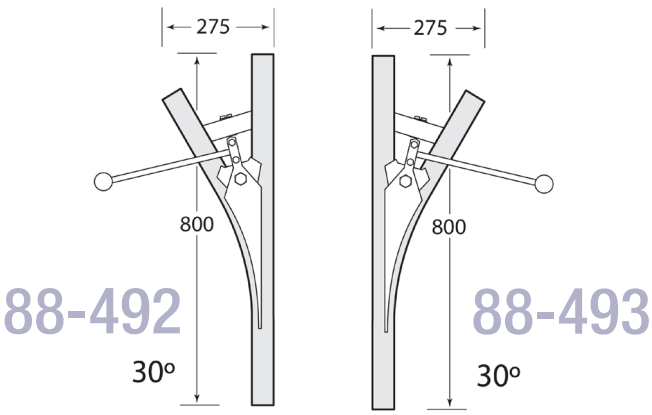

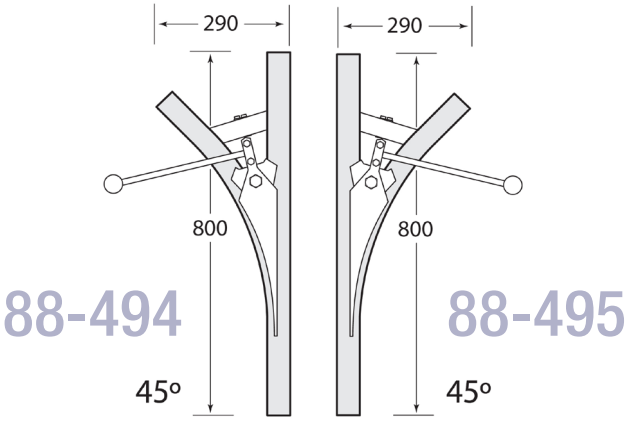

Contact our knowledgeable and friendly staff will be more than happy to talk you through any technical or specification questions you may have

01280 822288 | sales@runners-sales.com

multirail™

runners®

Track Switches

Two Direction Change

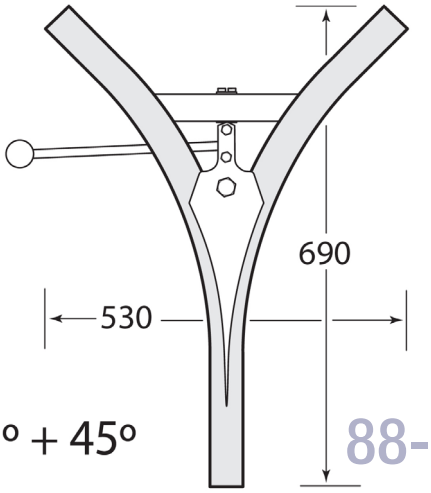

45° + 45°

88-491

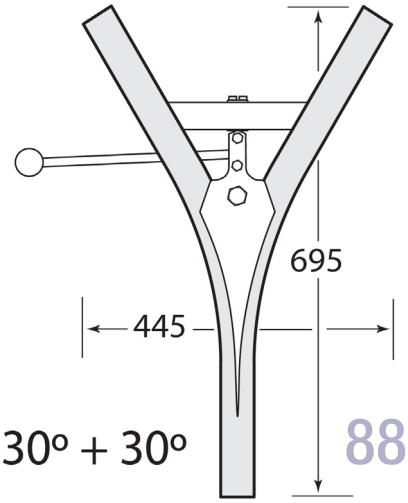

30° + 30°

88-490

Three Direction Change

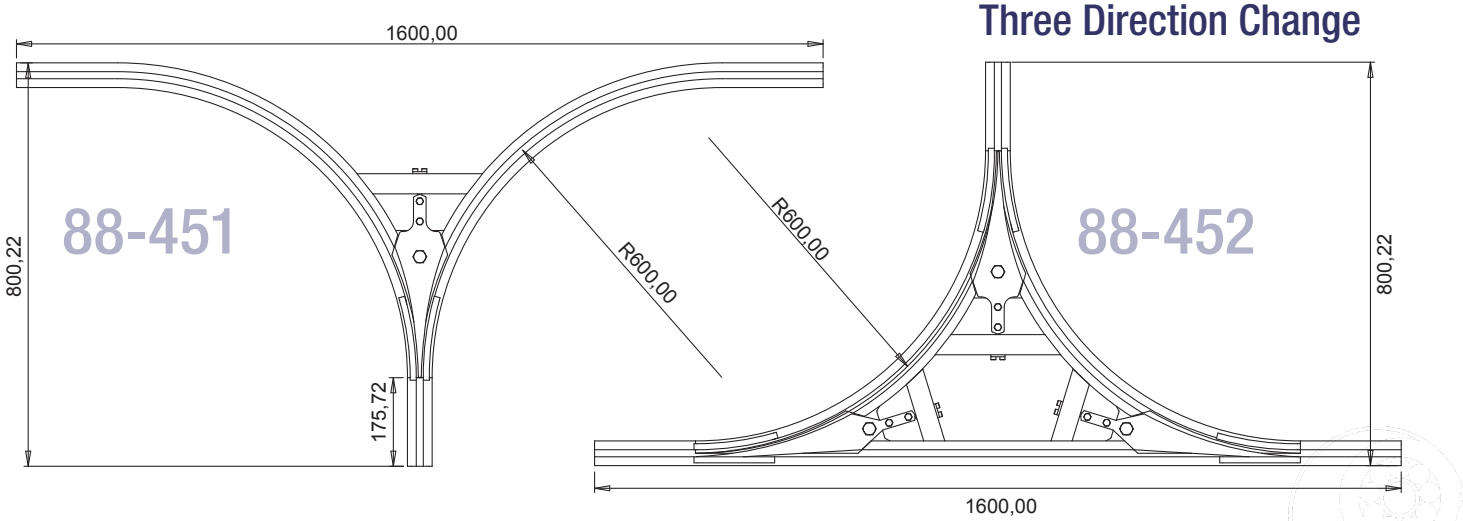

Hangers

Two Wheel Fixed Hanger

Maximum carrying capacity 80kg

Available in high temperature up to 250° bearing option - **88-411A**

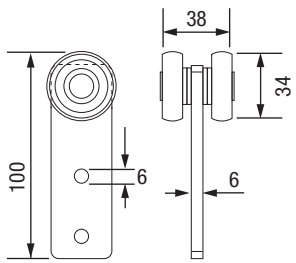

88-411

Four Wheel Fixed Hanger

Maximum carrying capacity 150kg

Available in high temperature up to 250° bearing option - **88-432**

88-423

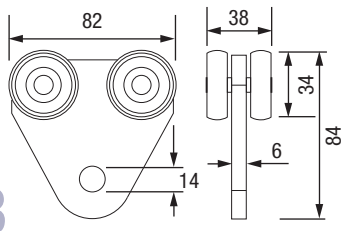

Contact our knowledgeable and friendly staff will be more than happy to talk you through any technical or specification questions you may have

01280 822288 | sales@runners-sales.com

multirail™

runners®

Hangers

Four Wheel Roller with Friction Rotating Plate

Maximum carrying capacity 150kg

150kg

88-419

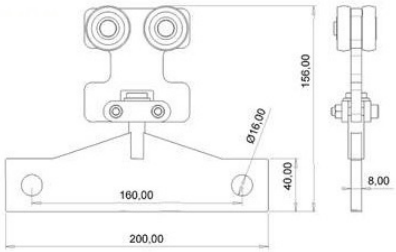

Four Wheel Rotating Hanger

Maximum carrying capacity 150kg

Available in high temperature up to 250° bearing option - **88-418**

150kg

88-417

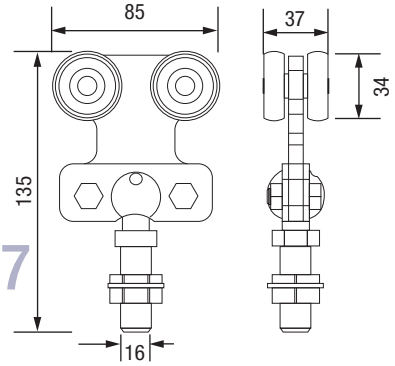

Optional M16 eye nut
101046

Four Wheel Rotating Hanger with Hook

Maximum carrying capacity 150kg
Stainless Steel Hook

150kg

88-422

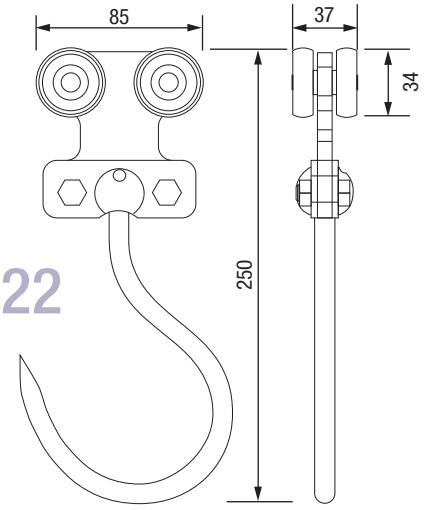

Four Wheel Hanger

Maximum carrying capacity 150kg

88-410

150kg

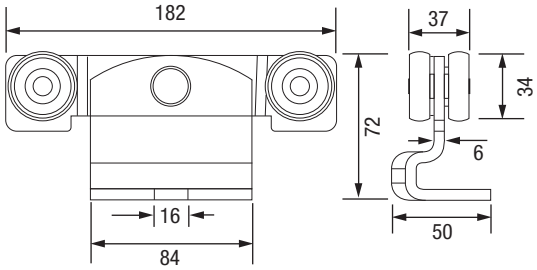

Screw for Hanger

88-415

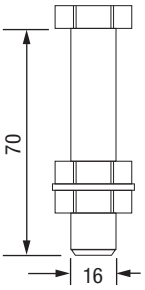

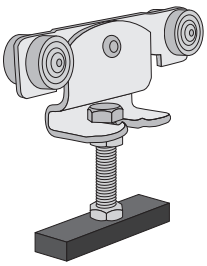

Threaded Fitting for Welding

88-416

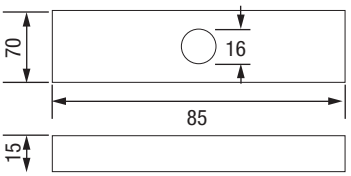

Contact our knowledgeable and friendly staff will be more than happy to talk you through any technical or specification questions you may have
01280 822288 | sales@runners-sales.com

multirail™

runners®

Brackets/Accessories

Ceiling Support Bracket

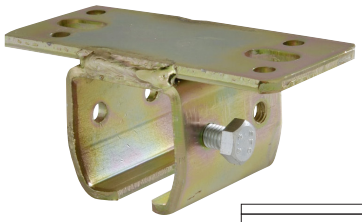

88-440

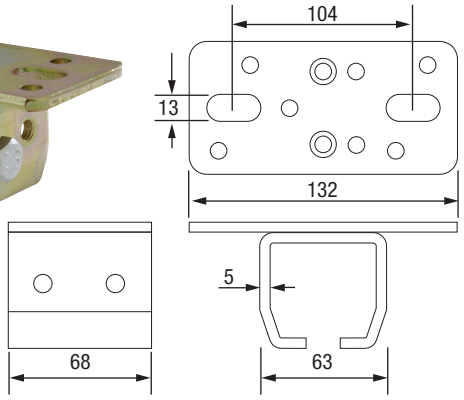

Wall Support Bracket

88-450

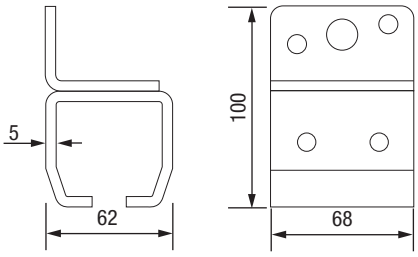

Split Suspension Bracket

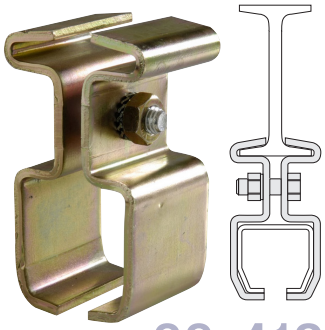

88-412

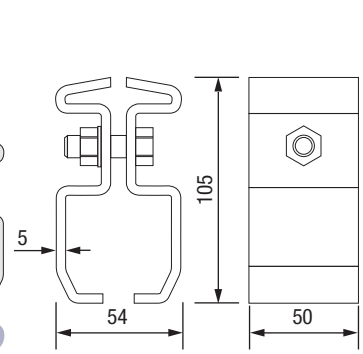

Split Suspension Bracket for Welding

88-413

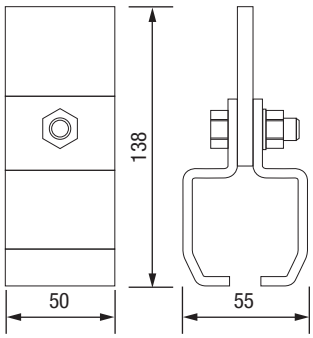

Track Joint

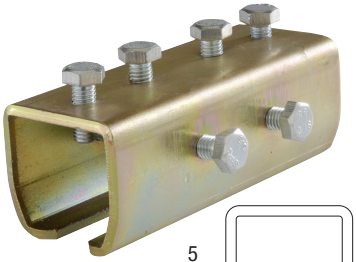

88-430

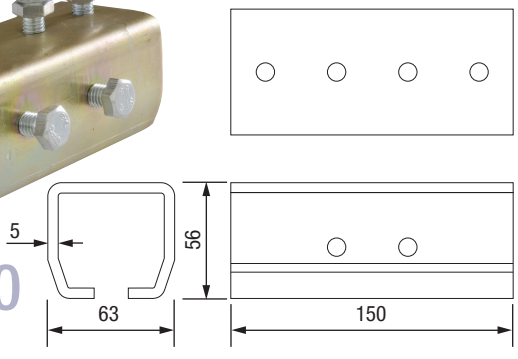

Track Stop

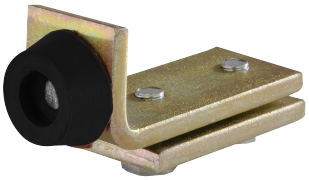

88-460

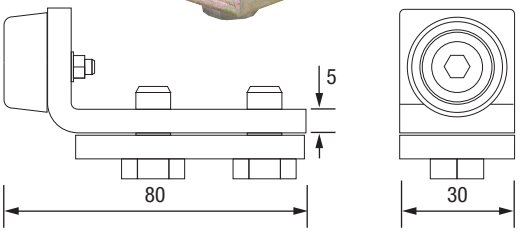

Accessories

Copper Hanging Wires (pack 50)

88-200

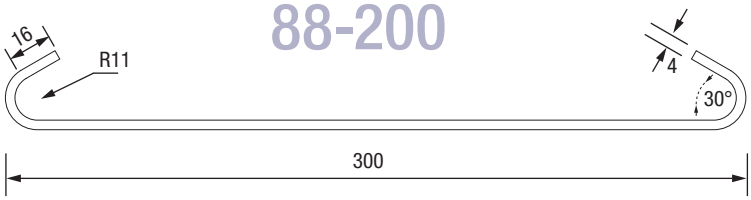

Screw-in Hooks (pack 100)

SCT 483

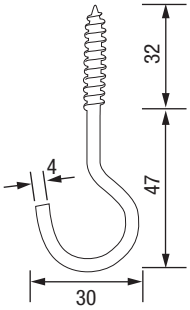

Contact our knowledgeable and friendly staff will be more than happy to talk you through any technical or specification questions you may have
01280 822288 | sales@runners-sales.com

multirail™

Turntable

Turntable For 4-Wheel Hangers

88-456

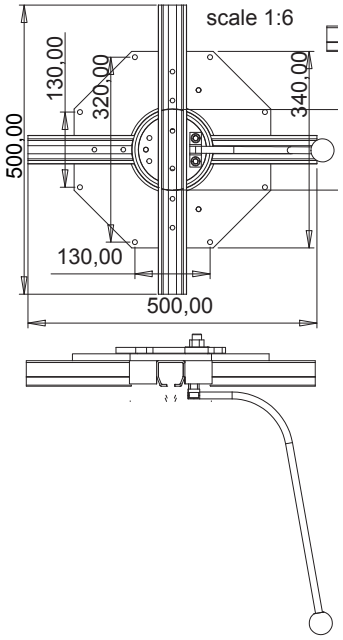

Configuration Example

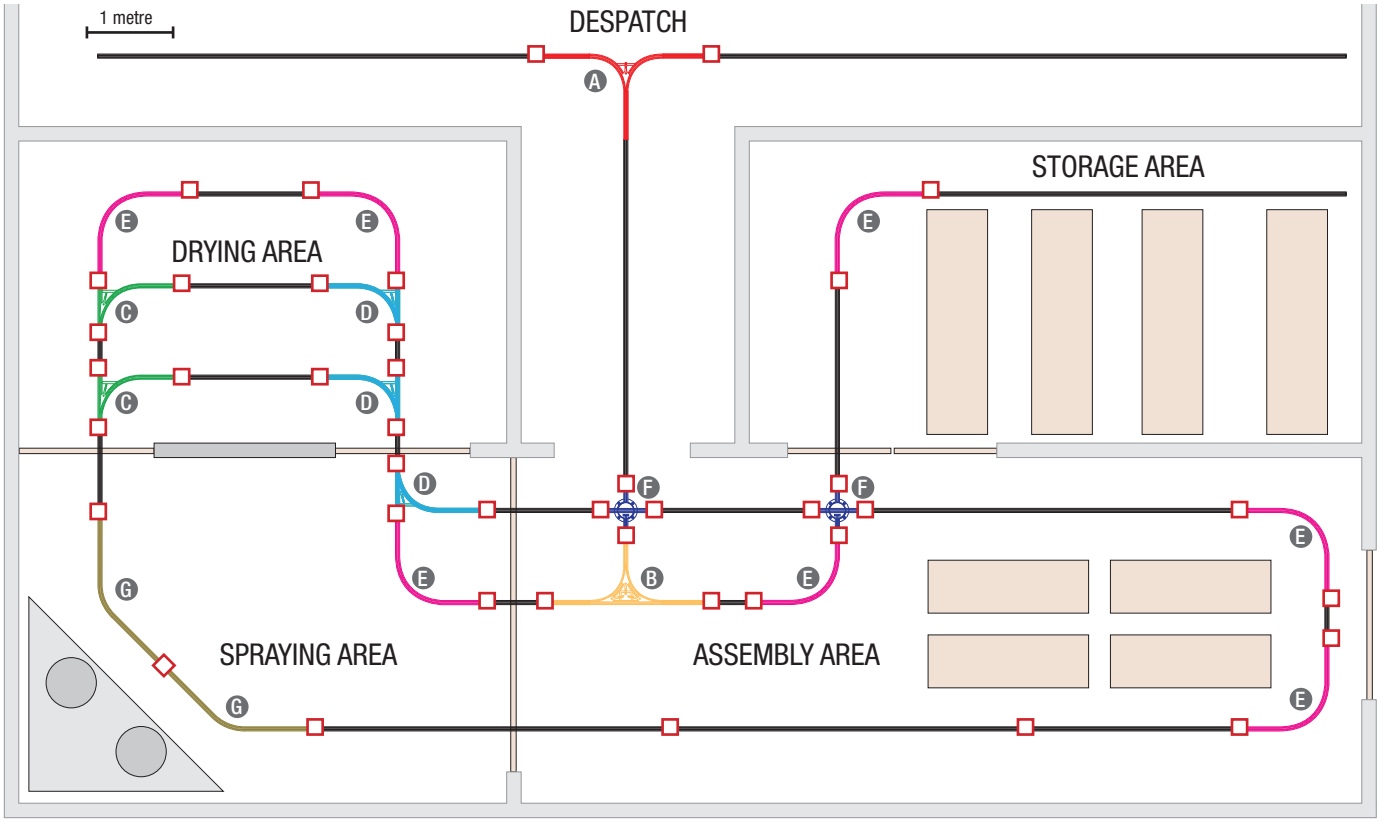

KEY

- A 88-451 2 direction change
- B 88-452 3 direction change
- C 88-454 1 direction change right
- D 88-453 1 direction change left
- E 88-424 90° bend
- F 88-456 4 wheel turntable
- G 88-425 45° bend
- ☐ 88-430 Track joint

Runners Sliding Systems
Signal Hill
Lenborough Road
Buckingham, MK18 4BU
01280 822288 | sales@runners-sales.com | www.runners-uk.com