DISC LED LUMINAIRE

GEO

Marshalls
Creating Better Spaces

The Geo Disc LED luminaire provides excellent photometric attainment, light distribution and flexibility of application from a striking aesthetic. Featuring an ultra low-profile aluminium body, silver anodised finish the Disc looks as good as it performs.

Designed for unrivalled visual coordination with other Geo street furniture and signage elements, the Disc provides an attractive and efficient lighting solution for your project. Available in two sizes, the **Disc 600** houses three 6-LED modules and the **Disc 750** houses four 6-LED modules.

Quality, flexibility and longevity assured…

- S-class optics give a wide road lighting distribution with full cut off.
- Highly efficient and powerful CREE XML LEDs are housed in modules of six, enabling mutiple-module specification for higher lighting requirements.
- The both the three and four module configurations can be operated at five running currents ranging from 350mA to 2100mA, providing a variety of efficiency and output options.
- Standard colour temperature is 5000°K with 4000°K and 3500°K available on request.
- Full consultation and lighting design service (Lighting Reality and Relux software) is available on request.
- LED modules and control gear are sealed to IP66 to give protection from dust and water ingress.
- Simple and quick LED module replacement.
- Alternative colours and finishes are available to match your project or town identity.
- Integrated photoelectric cell option for efficient operation.
- Wall mounted options are available with and without isolator.

DISC LED LUMINAIRE GEO

Marshalls
Creating Better Spaces

Geo Disc 600

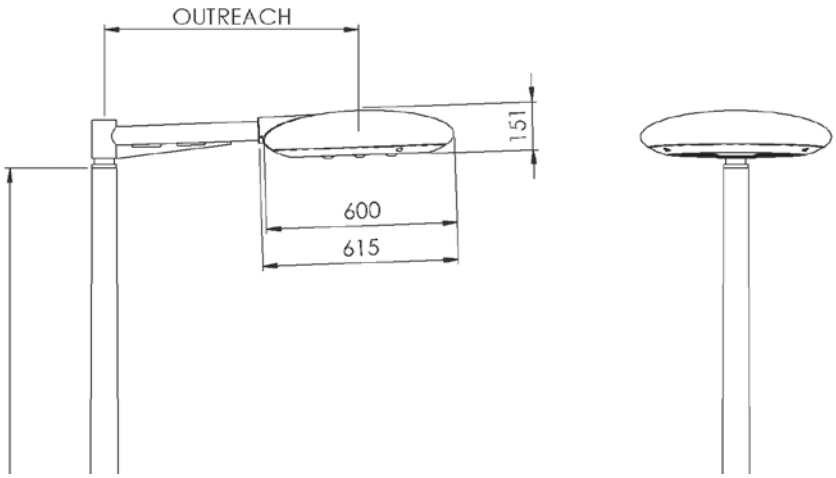

Marshalls Part Code	GE-LA-00355	GE-LA-00348	GE-LA-00356	GE-LA-00357	GE-LA-00358	GE-LA-00359
Product Name	Disc 600 3 Mod 350mA 5000°K 20.8W	Disc 600 3 Mod 700mA 5000°K 39.6W	Disc 600 3 Mod 1050mA 5000°K 61W	Disc 600 3 Mod 1400mA 5000°K 81.1W	Disc 600 3 Mod 1750mA 5000°K 102.5W	Disc 600 3 Mod 2100mA 5000°K 134.5W
Width (mm)	600	600	600	600	600	600
Height (mm)	136	136	136	136	136	136
Depth (mm)	600	600	600	600	600	600
Weight (kg)	14.5	14.5	14.5	14.5	14.5	14.5
Colour	RAL9006	RAL9006	RAL9006	RAL9006	RAL9006	RAL9006
Windage (m2)	0.08	0.08	0.08	0.08	0.08	0.08
IP Rating	IP66	IP66	IP66	IP66	IP66	IP66
Lamp Arrangement	LED array	LED array	LED array	LED array	LED array	LED array
Mounting Type	Side Entry 60mm	Side Entry 60mm	Side Entry 60mm	Side Entry 60mm	Side Entry 60mm	Side Entry 60mm
Body/Frame Material	Aluminium	Aluminium	Aluminium	Aluminium	Aluminium	Aluminium
Photo Voltaic Panel Option	No	No	No	No	No	No
Lens/Reflector Type	Injection moulded polycarbonate	Injection moulded polycarbonate	Injection moulded polycarbonate	Injection moulded polycarbonate	Injection moulded polycarbonate	Injection moulded polycarbonate
Mounting Type	Side Entry 60mm	Side Entry 60mm	Side Entry 60mm	Side Entry 60mm	Side Entry 60mm	Side Entry 60mm
Lamp Source	LED Array	LED Array	LED Array	LED Array	LED Array	LED Array
Design Lumens	1770	3530	4950	6360	7710	8830
Control Gear Type	Electronic	Electronic	Electronic	Electronic	Electronic	Electronic
Circuit Watts (w)	20.8	39.6	61.0	81.1	102.5	134.4
Current (A)	0.09	0.17	0.27	0.35	0.45	0.58
Nominal Voltage (V)	230	230	230	230	230	230
Frequency (Hz)	50	50	50	50	50	50
Switching Option	PECU	PECU	PECU	PECU	PECU	PECU
Dimming Option	Yes - Please consult Marshalls	Yes - Please consult Marshalls	Yes - Please consult Marshalls	Yes - Please consult Marshalls	Yes - Please consult Marshalls	Yes - Please consult Marshalls
Standard Compliance	EN60598	EN60598	EN60598	EN60598	EN60598	EN60598

DISC LED LUMINAIRE GEO

Marshalls
Creating Better Spaces

Geo Disc 750

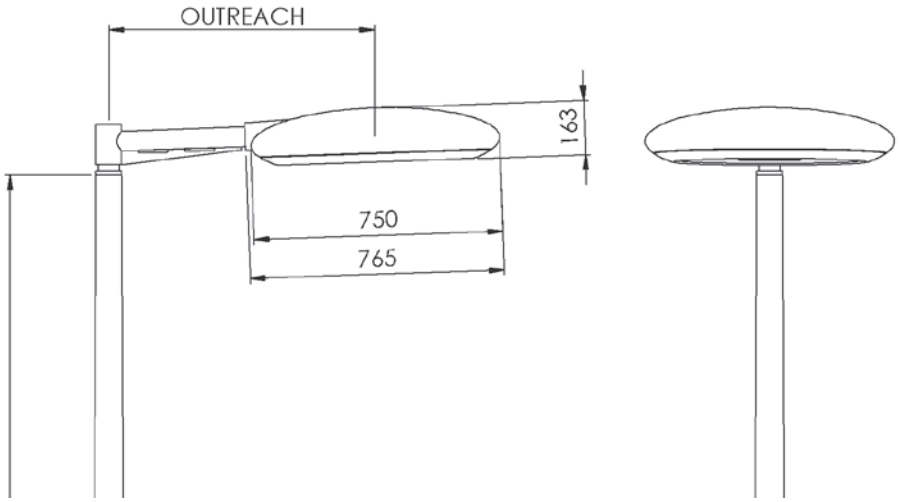

Marshalls Part Code	GE-LA-00360	GE-LA-00349	GE-LA-00361	GE-LA-00362	GE-LA-00363	GE-LA-00364
Product Name	Disc 750 4 Mod 350mA 5000ºK 27.7W	Disc 750 4 Mod 700mA 5000ºK 52.8W	Disc 750 4 Mod 1050mA 5000ºK 81.3W	Disc 750 4 Mod 1400mA 5000ºK 108.1W	Disc 750 4 Mod 1750mA 5000ºK 136.6W	Disc 750 4 Mod 2100mA 5000ºK 179.3W
Width (mm)	750	750	750	750	750	750
Height (mm)	160	160	160	160	160	160
Depth (mm)	750	750	750	750	750	750
Weight (kg)	22	22	22	22	22	22
Colour	RAL9006	RAL9006	RAL9006	RAL9006	RAL9006	RAL9006
Windage (m2)	0.12	0.12	0.12	0.12	0.12	0.12
IP Rating	IP66	IP66	IP66	IP66	IP66	IP66
Lamp Arrangement	LED array	LED array	LED array	LED array	LED array	LED array
Mounting Type	Side Entry 60mm	Side Entry 60mm	Side Entry 60mm	Side Entry 60mm	Side Entry 60mm	Side Entry 60mm
Body/Frame Material	Aluminium	Aluminium	Aluminium	Aluminium	Aluminium	Aluminium
Photo Voltaic Panel Option	No	No	No	No	No	No
Lens/Reflector Type	Injection moulded polycarbonate	Injection moulded polycarbonate	Injection moulded polycarbonate	Injection moulded polycarbonate	Injection moulded polycarbonate	Injection moulded polycarbonate
Mounting Type	Side Entry 60mm	Side Entry 60mm	Side Entry 60mm	Side Entry 60mm	Side Entry 60mm	Side Entry 60mm
Lamp Source	LED Array	LED Array	LED Array	LED Array	LED Array	LED Array
Design Lumens	2360	4710	6600	8480	10280	11770
Control Gear Type	Electronic	Electronic	Electronic	Electronic	Electronic	Electronic
Circuit Watts (w)	27.7	52.8	81.3	108.1	136.6	179.3
Current (A)	0.12	0.23	0.35	0.47	0.60	0.78
Nominal Voltage (V)	230	230	230	230	230	230
Frequency (Hz)	50	50	50	50	50	50
Switching Option	PECU	PECU	PECU	PECU	PECU	PECU
Dimming Option	Yes - Please consult Marshalls	Yes - Please consult Marshalls	Yes - Please consult Marshalls	Yes - Please consult Marshalls	Yes - Please consult Marshalls	Yes - Please consult Marshalls
Standard Compliance	EN60598	EN60598	EN60598	EN60598	EN60598	EN60598