Multi Playscapes

Mystical World Modular Play System
Mermaids Grotto
Product Code: 640-MERM

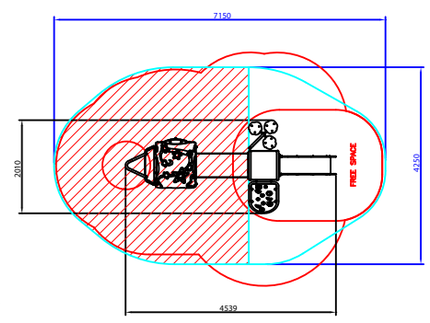

Max Free Fall Height = 925mm

Safety Surfacing Specification

Wet Pour:	15.5m² x 40mm
	9.5m² x 20mm
Tiles:	30.5m² x 33mm
Grass Mats:	23
Pin Kerb Edging:	18.5 linear metres

Scale 1:50 on A4

Key

Minimum Space
Wetpour Surfacing