Avon Barrier

Hostile Vehicle Mitigation Solutions

Avon Barrier Product Guide 2020

About Avon Barrier

Avon Barrier originally founded in 1989. We are an international designer, manufacturer and installer of Hostile Vehicle Mitigation (HVM) Solutions, offering a comprehensive solution in the field of entry/exit security control points and perimeter protection. We are an international ISO 9001 accredited organisation, recognised for our high quality engineering and manufacturing with a wide range of PAS 68, IWA 14-1 & ASTM F2656 independently tested physical security products. We are based in the UK alongside a large manufacturing facility housing design, fabrication, project management and technical support and export globally, having systems in over 70 countries.

International regions are supported by sales and technical staff who work in conjunction with our network of resellers and approved suppliers to support systems locally. The list of successfully completed installations worldwide runs to in excess of ten thousand. Our key sectors are:

- Oil & Gas
- Stadiums, Shopping Malls & Public Spaces
- Airports/ Ports /Rail
- Diplomatic & Government Buildings
- Cash Handling & Banking
- Datacentres
- Military
- UN & NATO

We look forward to being of service to you.

Contents

Crash Test Programme

The key to critical infrastructure protection from Vehicle Borne Improvised Explosive Device (VBIED) is a combination of access restriction and approach speed management and whilst careful planning and layout design can assist with the restriction of approach speed, the final line of defence is the blocking system.

As Vehicle Security Barriers (VSBs) are designated as life saving equipment, it is essential that they are suitable to combat today's ever increasing threat types. The equipment developed by Avon Barrier has therefore been extensively tested in a number of ways to ensure that when it needs to perform, it will play its part.

Testing work undertaken to date includes dynamic impact testing with a variety of different impact forces, penetration testing and explosive shrapnel dispersal testing.

In today's environment higher levels of perimeter protection are increasingly necessary and design consultants are tasked with ensuring that installations are not only safe and secure in the current climate but are also future proofed against an escalating threat level.

Avon Barrier's commitment to protection extends to the provision of a frontline service to design consultants to assist in the correct specification and design of security control points.

What are PAS 68 & IWA 14-1?

PAS 68 & IWA 14-1 have been prepared to address the needs of organisations who wish to have assurance that vehicle security barriers (VSBs) will provide the level of impact resistance that they seek.

In the UK, the CPNI (Centre for Protection of National Infrastructure) in conjunction with other stakeholders developed the PAS 68 classification. This has now been replaced with the International Works Agreement (IWA) 14-1, combining elements of both PAS 68 and the US classification ASTM 2656.

PAS 68 & IWA 14-1 specifies the essential impact performance requirement for a VSB and a test method for rating its performance when subjected to a single impact by a test vehicle not driven by a human being.

A PAS 68 & IWA14-1 performance rating is designated to each product that has been impact tested; this classification code should be available to confirm the test results.

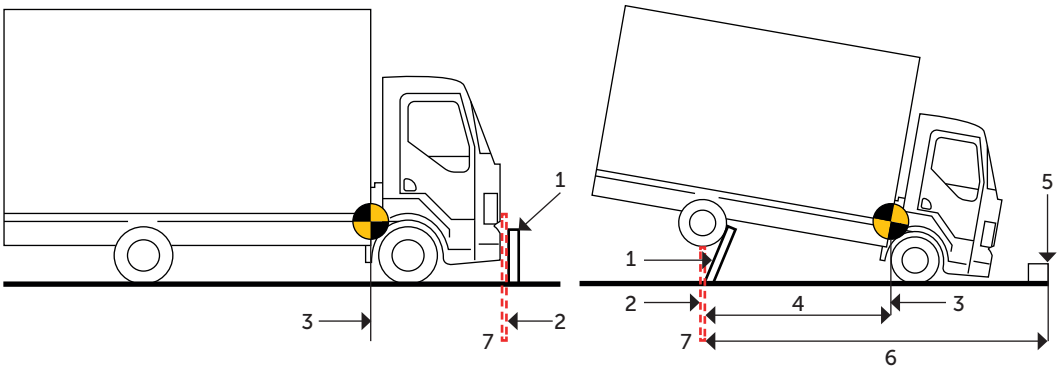

KEY

1 = Vehicle Security Barrier / test item
2 = VSB datum line
3 = Vehicle datum point
4 = Vehicle penetration distance
5 - Major debris
6 = Major debris distance
7 = indication of change in position of penetration measurement

Interpreting the IWA 14-1 Classification Code

V/7200(N2A)/64/90:2.4					
V	7200	(N2A)	64	90	2.4
Vehicle	Test Weight of Vehicle (shown in Kg)	Vehicle Class	Speed of Vehicle (shown in KPH)	Angle (angle at which the vehicle hit the barrier)	Penetration of Vehicle (shown in metres)

Interpreting the PAS 68 Classification Code

V/7500(N2)/80/90:0/1.2						
V	7500	(N2)	80	90	0	1.2
Vehicle	Test Weight of Vehicle (shown in Kg)	Vehicle Class	Speed of Vehicle (shown in KPH)	Angle (angle at which the vehicle hit the barrier)	Penetration of Vehicle (shown in metres)	Dispersion (debris dispersion shown in metres)

Interpreting ASTM Code

M50:50-P1		
M50	50	P1
US Vehicle Category	Impact Speed (mile/h)	Penetration Rating

Other International Testing Standards:

A European CEN workshop agreement CWA 16221:2010 combined detail from BSI PAS 68 & PAS 69

International Workshop Agreements IWA 14-1 & IWA 14-2, combines elements of EU and the US testing criteria.

Department of State (DOS) Crash Test Certification SD-STD-02.01, Revision A, March 2003 - Test Method for Vehicle Crash Testing Of Perimeter Barriers and Gates.

The DOS SD-STD-02.01 has been superceded by ASTM F2656 Standard Test Method for Vehicle Crash Testing of Perimeter Barriers.

Standard	Rating	Vehicle Weight (lbs)	Vehicle Speed (mph)	Rating	Allowable Truck Bed Penetration (ft)
DoS K-Ratings	K- Rating			L-Rating	
	K4	15,000	30	L1	20-50
	K8	15,000	40	L2	3-20
	K12	15,000	50	L3	<3
ASTM F2656 Standard	M-Designation			P-Rating	
	M30	15,000	30	P4	>98
	M40	15,000	40	P3	23.1-98.4
	M50	15,000	50	P2	3.31-23
				P1	<3.3

ROAD BLOCKER

RB1000CR Centurion

Avon RB1000CR Centurion Road Blocker provides a high level of security against unauthorised vehicle access.

The blocker has a 1000mm high blocking segment and is designed as a Hostile Vehicle Mitigation (HVM) solution providing protection to sites from extreme Vehicle Borne Improvised Explosive Device (VBIED) attack.

Physically impact tested in accordance with the US standard ASTM F2656 by the Motor Industry Research Association (MIRA), achieving an M50 P1 rating and remaining operational after impact.

The electro-hydraulically operated blocker comes with a push-button control as standard. The hydraulic power pack is controlled by a programmable logic controller (PLC) enabling connection of virtually any access control to the blocker. In addition, the PLC can be configured to enable the blocker to be raised quickly (under 1 second) in an emergency by utilising an hydraulic accumulator (optional). In the event of power failure a manual pump is provided to ensure operator control is maintained

The blocker is also available as an optional HCIS Road Blocker specifically designed to comply with the Kingdom of Saudi Arabia's (KSA) Ministry of Interior, HCIS Security Directives for crash barriers.

PRODUCT SPECIFICATION

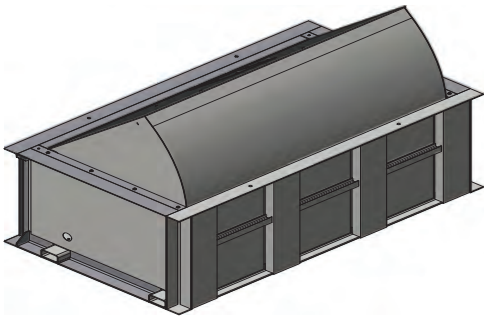

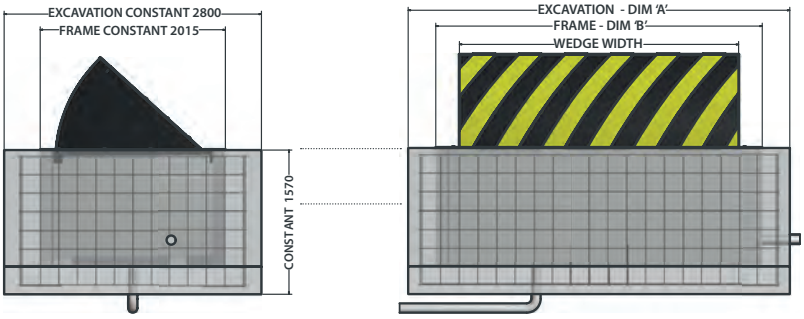

RB1000CR ASTM ROAD BLOCKER WIDTH OPTIONS		
WEDGE WIDTH	DIM 'A'	DIM 'B'
2M	3100	2508
3M	4100	3508
4M	5100	4508
5M	6100	5508

Physical Dimensions:	3m Road Blocker: W - 3508mm | D - 2015mm | H - 1280mm
Raised height of blocking segment:	1000mm
Blocker widths available:	2000-5000mm in 500mm increments
Physical Dimensions HPU Cabinet (single):	W - 640/940mm | D - 670mm | H - 1300mm
Basic Power Requirements:	3-Phase 380/415V AC, 50/60Hz
Control Voltage:	S.E.L.V 24v
Performance:	Loading 30 Tonnes
ASTM Classification:	ASTM F2656-07 M50 P1
Tested Model:	3 Metre blocking segment 1m high blocking segment (raised)
Speed of Operation:	6 Seconds to raise or lower (alternative speeds available as option)
Emergency Fast Raise (option):	<1.5 seconds to raise Emergency Fast Operation (EFO)
Operating temperature ranges available (option):	-25°C - +75°C (variables available as options)

FEATURES

- Physically impact tested ASTM F2656 M50 P1
- Manufactured from heavy gauge materials
- Manual hand pump facility
- Programmable logic control system
- 100% duty cycling
- Fully clad base

BENEFITS

- Confidence in proven performance
- Strong and durable
- Operational under power failure conditions
- Flexibility to interface with all forms of access control
- Reliable and dependable
- Simple to install

OPTIONS AVAILABLE

This is a specialist high security product and is designed for use with vehicles only and a full site risk assessment must be carried out at design stage to ensure that all relevant safety systems are included.

We strongly recommend that the blocker is within sight of the blocker controller at all times and that a recordable CCTV system is in use. For safety reasons pedestrians, cyclists and motorcycles should not use a blocker controlled roadway.

- Fully compliant HCIS road blocker
- Emergency fast raise system
- Emergency buttons with lock down
- LPS 1175 cabinets available for HPU
- Speed of operation 3-5 Seconds
- Access and intercom systems
- UPS backup for the electrical system
- Operating temperatures & environments
- Interlocking systems to give air-lock type protection on sites with higher threat levels
- Inductive loop systems
- Traffic lights and back-indications systems
- Integral inset warning lights in blocking segment
- Accumulator systems (fail secure) for hydraulic operation in power failure conditions
- Operating humidity range 5%-100% (non condensing)

ROAD BLOCKER

RB780CR Chieftain

Avon RB780CR Chieftain High Security Road Blocker provides a high level of security against unauthorised vehicle access, designed to withstand direct impact forces in excess of 1,852 KJ, the RB780CR road blocker is a Hostile Vehicle Mitigation (HVM) solution providing protection to sites from extreme Vehicle Borne Improvised Explosive Device (VBIED) attack.

It has been independently, structurally evaluated by the Transport Research Laboratory (TRL) and has also been physically tested in a number of full scale crash tests conducted in accordance with PAS 68 by the Motor Industry Research Association (MIRA). This led to the RB780CR Chieftain High Security Road blocker becoming one of the first British built road blockers to be installed by the British Government.

The RB780CR is an electro-hydraulically operated blocking system with segment widths available from 2m to 6m (in 500mm increments). The unit has an 800mm height when fully raised and is comprised of a static sub-surface ground frame with hinged, rising impact wedge. Raised/ Lowered back indication signalling can be provided to enable remote monitoring of the blocker status on a real time basis (optional).

The road blocker comes with a push-button as standard and its hydraulic power pack is controlled by a programmable logic controller (PLC) enabling connection of virtually any access control to the blocker. In addition, the PLC can be configured to enable the blocker to be raised quickly (under 1 second) in an emergency by utilising an hydraulic accumulator (optional). In the event of power failure a manual pump is provided to ensure operator control is maintained.

PRODUCT SPECIFICATION

RB780CR CHIEFTAIN ROAD BLOCKER WIDTH OPTIONS		
WEDGE WIDTH	DIM 'A'	DIM 'B'
2M	3430	2510
2.5M	3930	3010
3M	4430	3510
3.5M	4930	4010
4M	5430	4510
4.5M	5930	5010
5M	6430	5510
5.5M	6930	6010
6M	7430	6510

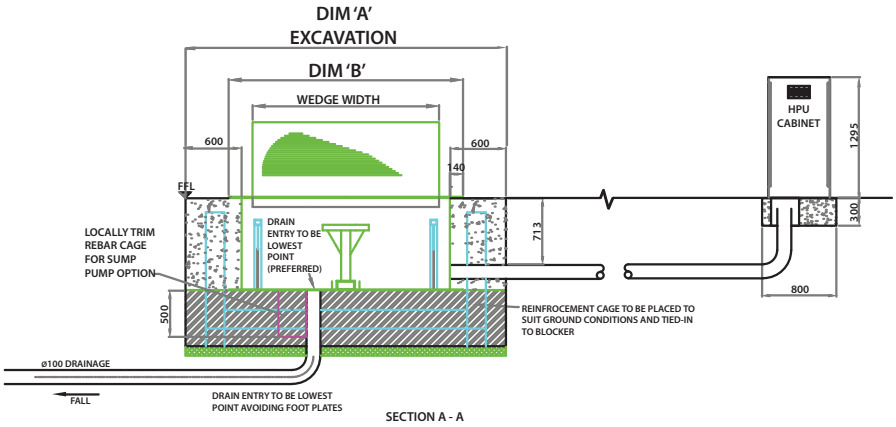

FEATURES

- Multiple testing (5 different / independent physical tests)
- Independently structurally evaluated
- Physically impact tested to PAS 68 criteria
- Manufactured from heavy gauge materials
- Manual hand pump facility
- Programmable logic control system
- 100% duty cycling
- Fully clad base

BENEFITS

- Comprehensive understanding of attack resistance
- Protection from multi-direction impact approach
- Confidence in proven performance
- Strong and durable
- Operational under power failure conditions
- Flexibility to interface with all forms of access control
- Reliable and dependable
- Simple to install

Physical Dimensions of 2m Road Blocker (Single):	W - 2510mm | D - 1770mm | H - 1000mm
Physical Dimensions of HPU Cabinet (Single):	W - 640/940mm | D - 670mm | H - 1300mm
Basic Power Requirements:	3-Phase 415v AC, 50Hz, (other voltages are available)
Control Voltage:	S.E.L.V 24v
Performance:	Loading 30 Tonnes
PAS 68 Classification:	V/7500(N2)/80/90:0/17 (fully operational immediately after impact)
Tested Model:	800mmHx2.0mW
Speed of Operation:	6 Seconds to raise or lower (other speeds available)
Emergency Fast Operation (EFO) (option):	<1.5 seconds to raise
Operating temperature ranges available (option):	-25°C - +70°C

This is a specialist high security product and is designed for use with vehicles only and a full site risk assessment must be carried out at design stage to ensure that all relevant safety systems are included.

We strongly recommend that the blocker is within sight of the blocker controller at all times and that a recordable CCTV system is in use. For safety reasons pedestrians, cyclists and motorcycles should not use a blocker controlled roadway.

OPTIONS AVAILABLE

- Emergency fast raise, lock down buttons
- LPS 1175 cabinets available for HPU
- Accumulator systems for hydraulic operation in power failure conditions
- Access and intercom systems
- UPS backup for the electrical system
- Interlocking systems to give air-lock type protection on sites with higher threat levels
- Inductive loop systems
- Traffic lights and back-indications systems
- Integral inset warning lights in blocking segment

ROAD BLOCKER

RB880CR Defender

The RB880CR Defender Road Blocker offers a high level of protection where deeper foundations are not possible / practical. The shallow foundation blocker has a 1000mm high blocking segment and can withstand direct impact forces of 1,852 KJ, providing shallow mounted protection to sites from extreme Vehicle Borne Improvised Explosive Device (VBIED) attack.

The RB880CR Road Blocker has been independently physically tested in a number of full scale crash tests conducted in accordance with PAS 68 by the Transport Research Laboratory (TRL). This led to the RB880CR Defender High Security Road Blocker becoming the first British built shallow foundation road blockers installed by the British Government.

The RB880CR is an electro-hydraulically operated blocking system with a standard segment width of 2m or 3m. Raised/ Lowered back indication signalling can be provided to enable remote monitoring of the blocker status on a real time basis (optional).

The road blocker comes with a push-button as standard and its hydraulic power pack is controlled by a programmable logic controller (PLC) enabling connection of virtually any access control to the blocker. In addition, the PLC can be configured to enable the road blocker to be raised quickly (under 1 second) in an emergency by utilising a hydraulic accumulator (optional). In the event of power failure a manual pump is provided to ensure operator control is maintained.

The blocker can also be fitted with an optional debris protection skirt.

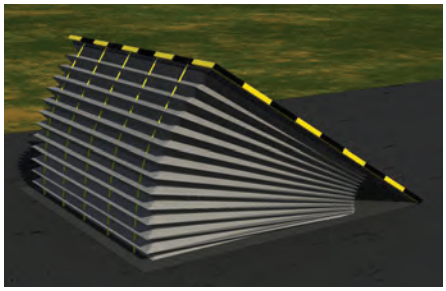

PRODUCT SPECIFICATION

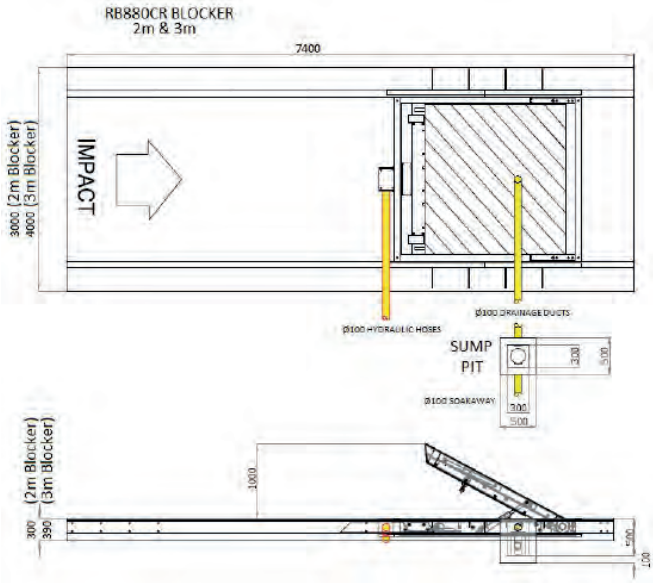

FEATURES

- Multiple testing (4 different independent tests)
- Road blockers shallow foundation / mounting from 300mm overall depth
- Physically impact tested to PAS 68 criteria
- Manufactured from heavy gauge materials
- Manual hand pump facility
- Programmable logic control system
- 100% duty cycling

BENEFITS

- Comprehensive understanding of attack resistance
- Overcomes site depth restrictions
- Confidence in proven performance
- Strong and durable
- Operational under power failure conditions
- Flexibility to interface with all forms of access control
- Reliable and dependable

Physical Dimensions of Road Blocker (Single):	(2m) W - 2520mm | D - 2210mm | H - 240mm (3m) W - 2520mm | D - 3210mm | H - 320mm
Physical Dimensions of HPU Cabinet (Single):	W - 640/940mm | D - 670mm | H - 1300mm
Basic Power Requirements:	3-Phase 415v AC, 50Hz, (other voltages are available)
Control Voltage:	S.E.L.V 24v
Performance:	Loading 20 Tonnes
Impact Absorption	1852KJ (fully operational immediately after impact)
Full PAS 68 Classification:	V/7500(N2)/48/90:0/0 & V/7500(N2)/80/90:0/0
Tested Model:	1m H x 2m W
Speed of Operation:	6 Seconds to raise or lower
Emergency Fast Operation (EFO) (option):	<1.5 second to raise
Operating temperature range available (option):	-25°C - +70°C

This is a specialist high security product and is designed for use with vehicles only and a full site risk assessment must be carried out at design stage to ensure that all relevant safety systems are included. We recommend that a debris protection skirt is fitted.

We strongly recommend that the blocker is within sight of the blocker controller at all times and that a recordable CCTV system is in use. For safety reasons pedestrians, cyclists and motorcycles should not use a blocker controlled roadway.

OPTIONS AVAILABLE

- Debris protection skirt
- Emergency fast raise, lock down buttons
- Accumulator systems for hydraulic operation in power failure conditions
- Access and intercom systems
- UPS backup for the electrical system
- Interlocking systems to give air-lock type protection on sites with higher threat levels
- Inductive loop systems
- Traffic lights and back-indications systems
- Integral inset warning lights in blocking segment
- LPS 1175 cabinets available for HPU

ROAD BLOCKER

RB980CR Sabre Surface

The Avon RB980CR Sabre Surface Road Blockers provide temporary high level protection where sub-surface foundations are not practical. Designed for temporary requirements the RB980CR is suitable as a high security control point for conferences or military checkpoints. Its fast deployment and high protection level makes the RB980CR ideal as a logistic support barrier for use in Theatre and support base protection.

Developed in conjunction with the British Military, our in-house engineering team designed these modular road blockers to combine ease of transportation and deployment with a high level of immediate protection.

The RB980CR has been independently physically tested in a number of full scale crash tests conducted in accordance with PAS 68 by the Transport Research Laboratory (TRL). This led to the RB980CR Sabre surface road blocker becoming the first British built impact resistant surface mounted road blocker approved for use by the British Government.

The RB980CR Sabre surface road blocker is an electro-hydraulically operated blocking system with a segment width of 2m and comes with a push-button control as standard. The unit has a significant 1m height when fully raised and is comprised of an RB880CR blocking system with side and approach ramps giving a standard 4m wide secured lane (can be modified to suit on request) Raised/Lowered back indication signalling can be provided to enable remote monitoring of the blocker status on a real time basis (optional).

The hydraulic power pack is controlled by a programmable logic controller (PLC) enabling connection of virtually any access control to the blocker. In addition, the PLC can be configured to enable the road blocker to be raised quickly (under 1 second) in an emergency by utilising a hydraulic accumulator (optional). In the event of power failure a manual pump is provided to ensure operator control is maintained. The blocker can also be fitted with an optional debris protection skirt.

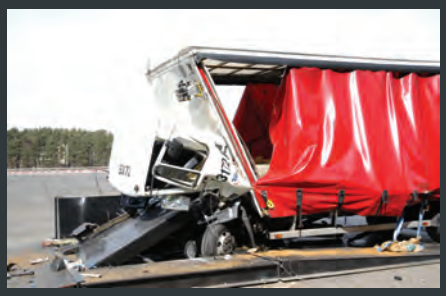

PRODUCT SPECIFICATION

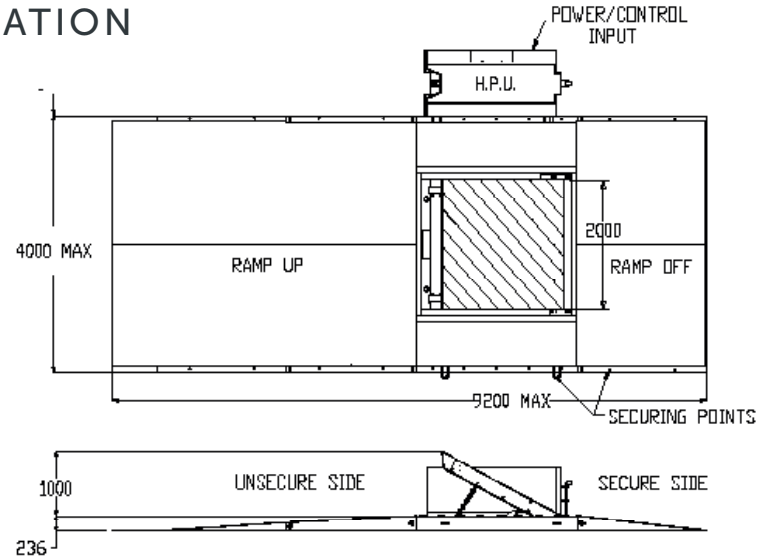

FEATURES

- Multiple testing (4 different / independent tests)
- Surface mounted road blocker - no foundations
- Modular construction
- Physically impact tested to PAS 68 criteria
- Manufactured from heavy gauge materials
- Manual hand pump facility
- Programmable logic control system
- 100% duty cycling

BENEFITS

- Comprehensive understanding of attack resistance
- No foundation requirements
- Fast deployment, operational within 1 hour (dependent on site conditions)
- Strong and durable
- Operational under power failure conditions
- Flexibility to interface with all forms of access control
- Reliable and dependable

Physical Dimensions of Road Blocker (Single):	W - 4000mm | D - 9200mm | H - 240mm (Dimensions variable to suit site requirement)
Physical Dimensions of HPU Cabinet (Single):	W - 2000mm | D - 1000mm | H - 1000mm (can also be smaller and positioned remote from Blocker)
Basic Power Requirements:	3-Phase 415v AC, 50Hz, (other voltages are available)
Control Voltage:	S.E.L.V 24v
Performance:	Loading 20 Tonnes
Impact Absorption:	1852KJ (fully operational immediately after impact)
Full PAS 68 Classification:	V/7500(N2)/80/90:8.5/12.8
Tested Model:	1m Hx2m W
Speed of Operation:	6 Seconds to raise or lower
Emergency Fast Operation (EFO) (option):	<1.5 seconds to raise (option)
Operating temperature ranges available (option):	-25°C - +70°C

This is a specialist high security product and is designed for use with vehicles only and a full site risk assessment must be carried out at design stage to ensure that all relevant safety systems are included. We recommend that a debris protection skirt is fitted.

We strongly recommend that the blocker is within sight of the blocker controller at all times and that a recordable CCTV system is in use. For safety reasons pedestrians, cyclists and motorcycles should not use a blocker controlled roadway.

OPTIONS AVAILABLE

- Debris protection skirt
- Emergency fast raise, lock down buttons
- Accumulator systems for hydraulic operation in power failure conditions
- Access and intercom systems
- UPS backup for the electrical system
- Traffic lights and back-indication system
- Counter weight side barges
- Roadway fixing bolts
- Integral inset warning lights in blocking segment
- LPS 1175 cabinets available for HPU

STATIC BOLLARDS

Scimitar Static

Avon's Scimitar PAS 68 tested Static Bollards provide a high level of security against unauthorised vehicle access without the need for an outwardly aggressive appearance.

Scimitar fixed bollards have been designed and physically impact tested to the BSI PAS 68 standard.

The static bollard range provides protection from a range of determined threats from vandalism to the extreme of a Vehicle Borne Improvised Explosive Device (VBIED), scimitar bollards are ideal to discreetly protect sites where aesthetics and public perception are a consideration.

Impact testing has been undertaken at a variety of speeds and foundation depths providing clients with a range of bollards with varying levels of protection. The Scimitar 75/30,75/40 & 75/50 can be adapted to removeable bollards as an option.

Static bollards can be utilised for on-street or perimeter stand-off protection, an unobtrusive hostile vehicle mitigation product that can be finished to complement surrounding architecture as well as interfacing with a wider range of high security vehicle control equipment.

PRODUCT SPECIFICATION

Scimitar Bollard Model	Scimitar 75/30	Scimitar 75/40	Scimitar 75/50	Scimitar S40 Shallow	Scimitar SB970CR Static
Vehicle Pre PAS 68 Test					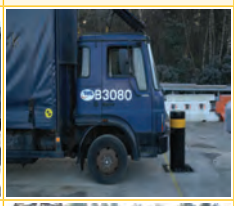
Vehicle Post PAS 68 Test					
PAS 68 Test Date	03/09/2009	16/02/2010	04/06/2010	24/05/2011	18/11/2005
PAS 68 Classificaion V/test weight [veh class]/speed/ angle:Penetration/ dipersion	V/7500(N2)/48/90:0/0	V/7500(N2)/64/90:3.3/0	V/7500(N3)/80/90:10.6/11.1	V/7500(N2)/64/90:13.8/0.0	D/7500[N2]/80/90/1852
Bollard Diameter/Height (FFL)	219mm/1000mm	273mm /1000mm	273mm/1000mm	273mm/1200mm	323mm/1000mm
Vehicle Weight Kg	7500	7500	7500	7500	7500
Vehicle Weight Lbs	16534	16534	16534	16534	16534
Vehicle Speed Mph	30	40	50	40	50
Vehicle Speed Kph	48	64	80	64	80
DoS US Classification (US equiv for ref only)	K4	K8	K12	K8	K12
Removable Option	☑	☑	☑	☒	☒

FEATURES

- Physically impact tested to PAS 68 criteria
- Unobtrusive appearance
- Proportionate levels of mitigation
- Manufactured from heavy gauge materials

BENEFITS

- Comprehensive understanding of attack resistance
- confidence in individual bollard performance
- Variety of finishes including paint, stainless steel & ornate sleeves
- Customer options
- Strength and durability

AUTO BOLLARDS

SB970CR Scimitar

Avon's SB970CR Scimitar Security Bollard is a PAS 68 impact tested bollard, that is hydraulically operated. It stands 1000mm in its fully raised position and retracts to road level to allow authorised vehicles access. It can be integrated with our other PAS 68 or IWA 14-1 static bollards to create a cohesive protective perimeter around an area or building.

A Hostile Vehicle Mitigation (HVM) solution designed to withstand direct impact forces in excess of 1,800 KJ, the bollard provides protection from extreme Vehicle Borne Improvised Explosive Device (VBIED) attack to sites where aesthetics and public perception are a consideration.

The automatic bollard comes with a push button control and is painted black with a yellow reflective band as standard but optional decorative sleeves are available and LED lights can be incorporated into the top of the bollard for illumination.

The automatic bollard comes with a push button control and is painted black with a yellow reflective band as standard but optional decorative sleeves are available and LED lights can be incorporated into the top of the bollard for illumination.

PRODUCT SPECIFICATION

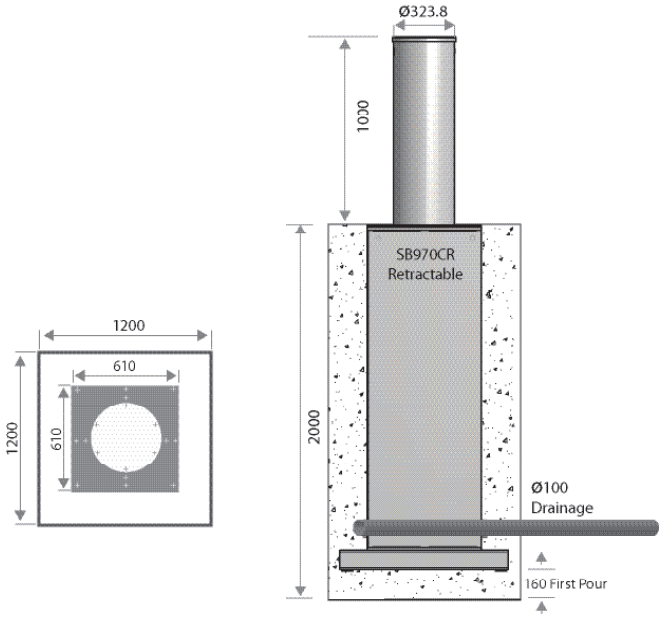

FEATURES

- Multiple testing (single bollard / multiple bollards)
- Unobtrusive appearance
- Physically impact tested to PAS 68 criteria
- Manufactured from heavy gauge materials
- Manual hand pump facility
- Programmable logic control system
- 100% duty cycling

BENEFITS

- Comprehensive understanding of attack resistance and confidence in individual bollard performance
- Aesthetically acceptable
- Ease of installation
- Confidence in proven performance
- Strong and durable
- Operational under power failure conditions
- Flexibility to interface with all forms of access control
- Reliable and dependable

Physical Dimensions of Single Bollard:	W - 610mm | D - 610mm | H - 2000mm
Physical Dimensions of HPU Cabinet (Single):	W - 640/940mm | D - 670mm | H - 1300mm
Raised Height of Bollard	1000mm
Basic Power Requirements:	3-Phase 415v AC, 50Hz, 20 Amps (other voltages are available)
Control Voltage:	S.E.L.V 24v
Performance:	Loading 30 Tonnes
Impact Absorption	Single SB970CR -1852KJ (fully operational immediately after impact) Dual SB970CR - 1852KJ (fully operational immediately after impact)
Full PAS 68 Classification:	V/7500(N2)/80/90:0/25
Tested Model:	H - 990mm x W 323.9mm (+/-1%)
Speed of Operation:	6 Seconds to raise or lower
Operating temperature range available (option):	-25°C - +70°C

This is a specialist high security product and is designed for use with vehicles only and a full site risk assessment must be carried out at design stage to ensure that all relevant safety systems are included.

We strongly recommend that the bollards are within sight of the bollard controller at all times and that a recordable CCTV system is in use. For safety reasons pedestrians, cyclists and motorcycles should not use a bollard controlled roadway.

OPTIONS AVAILABLE

- Traffic lights and back-indication systems
- Integrated LED Lighting in sleeve
- Emergency buttons with lock down
- Inductive loop systems
- Access and intercom systems
- Interlocking systems to give air-lock type protection on sites for higher threat levels
- Decorative sleeves (fibre glass / stainless steel)
- UPS backup for the electrical system
- LPS 1175 cabinets available for HPU

SUPER SHALLOW BOLLARDS

SSF100 Resilience

The Avon Resilience SSF100 Bollard is a super shallow foundation bollard, designed to provide stand-off hostile vehicle protection for infrastructure without the need for deep foundations.

With a structural foundation depth of just 100mm, the bollard offers the shallowest of foundations, whilst still providing a high level of protection against aggressive vehicle attack.

Physically tested in an array of 3 bollards to the IWA14-1:2013 Impact Test with N2A vehicle at 64kmh (40mph), it is designed & constructed to be installed with the minimum of civil excavation and its unique arrangement options enable it to be a flexible and versatile security solution.

The bollard can be customised to blend into surrounding environments, with a variety of sleeve options, including stainless steel and ornate finishes and ground finishes can include concrete, tarmac, block paving or crushed stone.

The design incorporates a unique feature to accommodate uneven surfaces, inclines or curves in bollard lines providing a full perimeter security solution.

Bollards are supplied painted black with a reflective banding as standard, other sleeve finishes are available as options.

PRODUCT SPECIFICATION

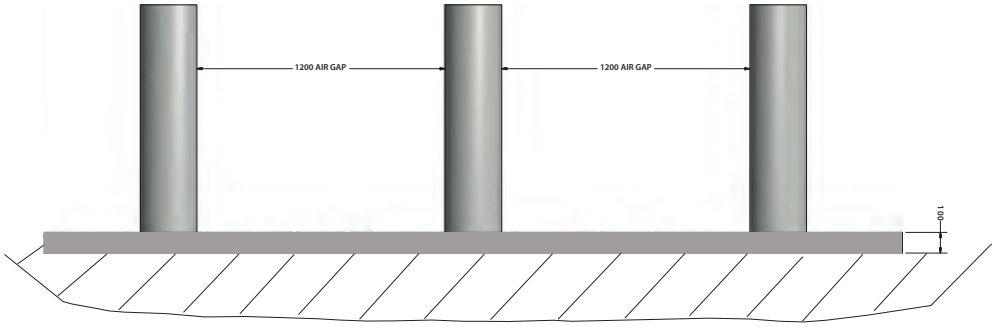

Options for stainless steel bollard finishes

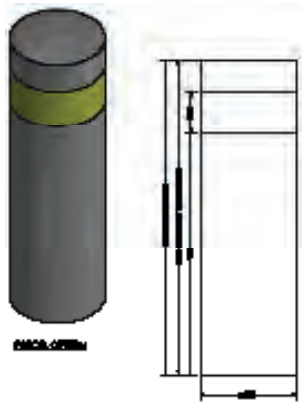

Sleeve + End Cap - Flat

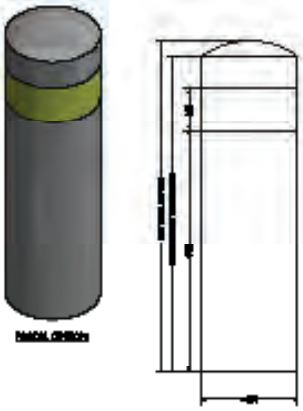

Sleeve + End Cap - Semi Dome

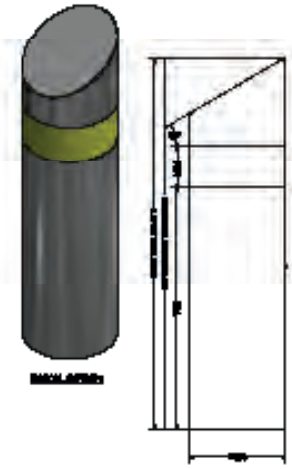

Sleeve + End Cap - 30° Mitre

FEATURES

- Physically impact tested to IWA 14-1
- Unobtrusive in appearance
- Super shallow foundation
- Alternative sleeve options
- Modular design

Physical Dimensions:	**Single Bollard** Tube Diameter: 273mm Tube Height: 1000mm above ground level
IWA 14-1 Classification:	IWA14-1:2013 Bollard V/7200[N2A]/64/90:4.9
Tested Model:	1000mm above ground with a spacing of 1200mm between bollards. The bollard diameter was 273mm

BENEFITS

- Confidence in proven performance
- Adaptable to surrounding aesthetics
- Minimal civil installation
- Overcomes site depth restrictions
- Full perimeter security

OPTIONS AVAILABLE

- Stainless Steel Sleeves
- Bespoke Ornate Sleeves
- DDA Compliant Banding
- Removeable Option
- Dome / Mitre / Flat tops

Please note this is a specialist high security product and a full site risk assessment must be carried out at design stage to ensure all relevant safety systems are included.

SECURITY BARRIERS

EB950CR Armstrong

Avon EB950CR Armstrong Security Barriers provide a high level of protection where central roadway foundations are not possible / practical. Withstanding direct impact forces in excess of 720 KJ, and provides shallow mounted protection to sites from extreme Vehicle Borne Improvised Explosive Device (VBIED) attack.

The EB950CR is a traditional looking control barrier with the benefits of high level physical protection.

The EB950CR has been independently physically tested in a number of full scale crash tests conducted in accordance with PAS 68 by the Transport Research Laboratory (TRL).

The EB950CR is an electro-hydraulically operated rising arm barrier with arm widths of up to 4.5m span . The barrier arm sits 1 m above the roadway and is supported by 2 side support frames. During impact the arm slides into a locked position protecting the main drive mechanism from damage. Raised/Lowered back indication signalling can be provided to enable remote monitoring of the barrier status on a real time basis (optional).

The hydraulic power pack is controlled by a programmable controller enabling connection of virtually any access control to the rising arm barrier. In the event of power failure a manual pump is provided to ensure operator control is maintained.

Evolving methods of hostile vehicle attacks involve smaller vehicles at lower speeds, driven at security barriers, using encroachment or nudging tactics to obtain access into protected areas.

The EB950CR offers an optional locking system that can be retrofitted to the end of the boom. This modification has undergone additional IWA 14-1 testing using an 1500Kg (M1) saloon car traveling at 30mph. It also successfully passed the CPNI VADS (Vehicle Access Delay Standard) testing which provides assurances that it is capable of withstanding repetitive nudging and ramming to gain access.

The locking modification ensures all vehicles and a variety of tactics are protected against. It has been designed to retrofit to existing EB950CR and is available as an option for new EB950CRs.

PRODUCT SPECIFICATION

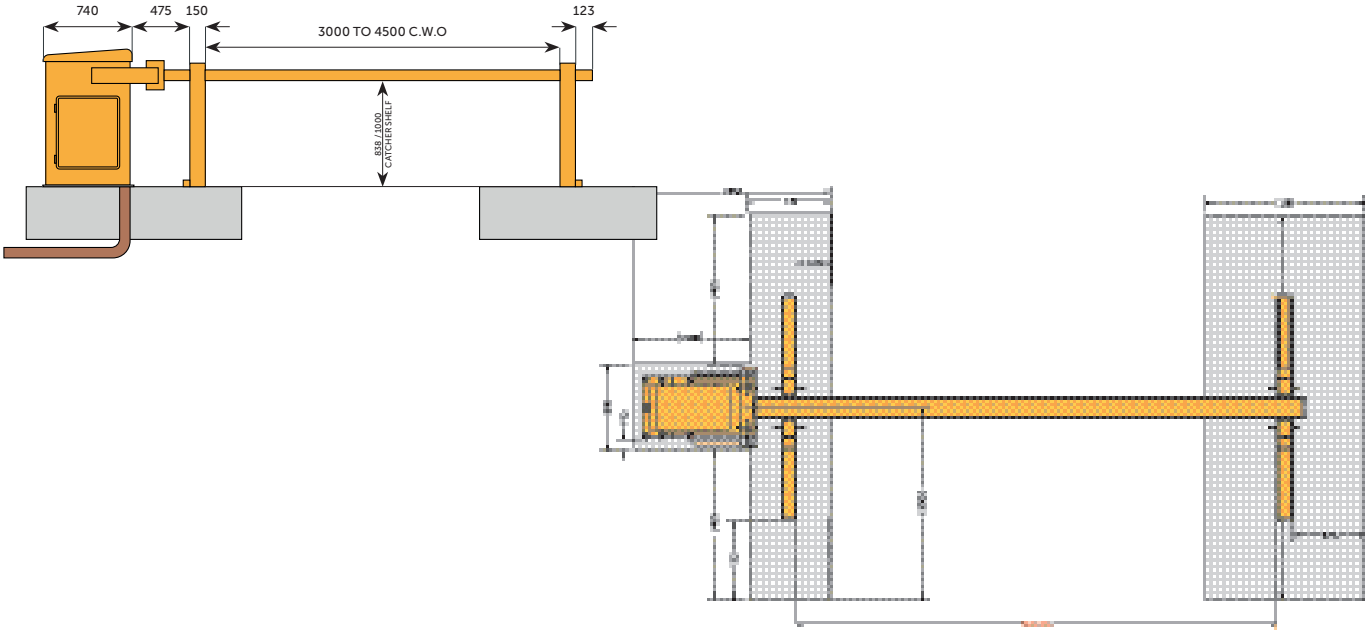

FEATURES

- Physically impact tested to PAS 68 & IWA 14-1 criteria
- Shallow mounting from 450mm overall depth
- Manufactured from heavy gauge materials
- Manual hand pump facility
- Programmable controller
- 100% duty cycling

BENEFITS

- Confidence in proven performance
- Overcomes site depth restrictions
- Strong and durable
- Operational under power failure conditions
- Flexibility to interface with all forms of access control
- Reliable and dependable

Physical Dimensions:	Barriers Arm - 5m max W - 600mm | D - 890mm | H - 1230mm Barrier Catcher Foundations W - 1500mm | D - 3600mm | H - 470mm
Basic Power Requirements:	Single phase 220v AC, 50Hz, Min 16 Amps (dependent on configuration)
Control Voltage:	S.E.L.V 24v
Impact Absorption	723KJ (fully operational immediately after impact)
PAS 68 Classification:	V/7500(N2)/48/90:0.0/0.0
IWA 14-1 Classification:	V/1500(M1)/48/90:1.9
Tested Model:	1m H x 3m W
Speed of Operation:	6 - 10 Seconds to raise or lower
Operating temperature range available (option):	-25°C - +70°C

This is a specialist high security product and is designed for use with vehicles only and a full site risk assessment must be carried out at design stage to ensure that all relevant safety systems are included.

We strongly recommend that the barrier is within sight of the barrier controller at all times and that a recordable CCTV system is in use. For safety reasons pedestrians, cyclists and motorcycles should not use a barrier controlled roadway.

OPTIONS AVAILABLE

- Access and intercom systems
- Emergency buttons with lock down
- Integral inset warning lights
- UPS backup for the electrical system
- Interlocking systems to give air-lock type protection on sites with higher threat levels
- Inductive loop systems
- Traffic lights and back-indications systems

SECURITY GATE

Avon Universal Cedar Gate

The Avon Universal Cedar Gate has evolved from the original Newey barrier, a UK government design of security gate providing a cost effective means of securing an entry or exit point whilst still providing a high level of protection.

Our redesign of the gate in 2019 enhances its flexibility introducing universal frames for dual handing. Ease of installation adds to the benefits of this gate.

The 6m Gate was tested to the IWA14-1 classification with a 7200kg N2A truck traveling at 48kph at the independent testing agency Horiba MIRA Ltd.

The manually operated lifting gate is a Hostile Vehicle Mitigation (HVM) solution, ideal for low volumes of traffic flow or where the access point is used infrequently.

PAS 68 testing on variances of the Cedar Gate have included 3 metre, 4.5 metre & 6 metre clear width opening models of the gate.

The Avon Cedar Gate is a manually operated lifting gate available with a range of clear width openings. The arm sits 900mm above the roadway and is supported by 2 side universal support frames.

The gate is counterweighted for ease of operation and comes with a manual locking mechanism to secure the barrier in the lowered / closed position.

The Universal Cedar Gate has successfully undergone IWA 14-1 testing using an 1500Kg (M1) saloon car traveling at 30mph. It also successfully passed the CPNI VADS (Vehicle Access Delay Standard) testing which provides assurances that it is capable of withstanding repetitive nudging and ramming to gain access.

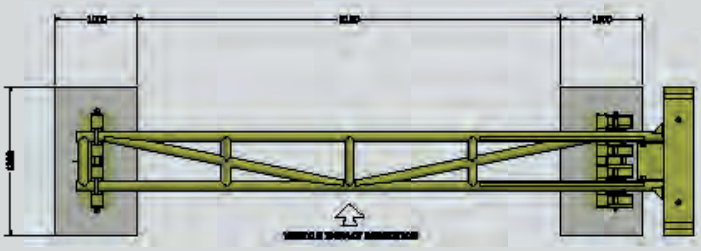

Physical Dimensions:	**Barrier Cabinet** W - 900mm | D - 1800mm | H - 500mm Gate aperture – 3m - 6m Max
Operation:	Manual
Full IWA 14-1 Classification:	IWA 14-1:2013 Gate V/7200(N2A)/48/90:1.2 6m IWA14-1:2013 Gate V/1500[M1]/48/90:2.0
Full PAS 68 Classification:	V/7500(N2)/48/90:0.3/0.0 - 6m model V/7500(N2)/48/90:0/0 - 4.5m model
Tested Model:	3m, 4.5m & 6m Gate aperture

FEATURES

- Physically crash tested to IWA 14-1 criteria
- Physically successfully tested to VADS
- Universal frames for dual handing
- Locking in raised and lowered position
- Manufactured from heavy gauge materials
- Manually operated

BENEFITS

- Confidence in security performance
- Ease of installation
- Strong and durable
- No power supply required

SECURITY GATE

GC1100CR High Impact Hinged Gate

The Avon GC1100CR High Impact Hinged Gate provides a high level of security against unauthorised vehicle access.

Designed to withstand substantial direct impact forces the gate is used to protect sites from extreme aggressive attacks. Manufactured by engineers with a wealth of experience in the fields of Hostile Vehicle Mitigation (HVM) Solutions , the GC1100CR is a highly dependable security product.

The manually operated hinged gate incorporates the crash tested vehicle restraint system (1852KJ resistance).

Shallow foundation depths are from under 470mm subject to gate design.

With an experienced system design capability along with a worldwide installation, service and maintenance capability, we are able to provide a swift and efficient solution to all your high security requirements.

Physical Dimensions:	To suit site requirements
Operation:	Manual
Impact Absorption	1852KJ
Full PAS 68 Classification:	V/7500/80/90:5.7/0
Tested Model:	1.0m H x 3.8m opening

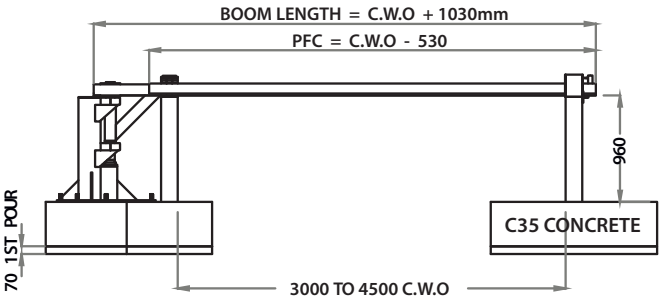

OPENING CATCHER NOT SHOWN IN THIS VIEW

Please note this is a specialist high security product and is designed for use with vehicles only and a full site risk assessment must be carried out at design stage to ensure all relevant safety measures are included.

FEATURES

- Confidence in security performance
- Strong and durable
- Reliable and dependable
- Overcomes site depth restrictions

BENEFITS

- Physically impact tested to PAS 68 criteria
- Manufactured from heavy gauge materials
- Shallow foundation less than 470mm overall depth

SECURITY GATES

SG1100CR Armoured Vehicle Gate

The Avon SG1100CR High Impact Sliding Armoured Vehicle Gate provides a high level of security against unauthorised vehicle access.

Designed to withstand substantial direct impact forces the gate is used to protect sites from extreme aggressive attacks while maintaining a pedestrian secure environment.

Manufactured by engineers with a wealth of experience in the fields of Hostile Vehicle Mitigation (HVM) solutions, the SG1100CR is a highly dependable security product.

The SG11100CR gate has been independently physically tested in a number of full scale crash tests conducted in accordance with PAS 68 by MIRA and the Transport Research Laboratory (TRL).

The gate is available in range of gate heights, clear widths and infill types to be provided. Foundation depths are from 500mm subject to gate design.

With an experienced system design capability along with a worldwide installation, service and maintenance capability, we are able to provide a swift and efficient solution to all your high security requirements.

PRODUCT SPECIFICATION

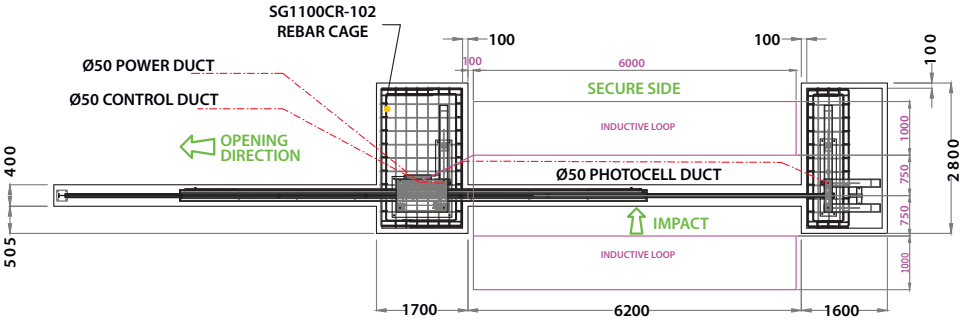

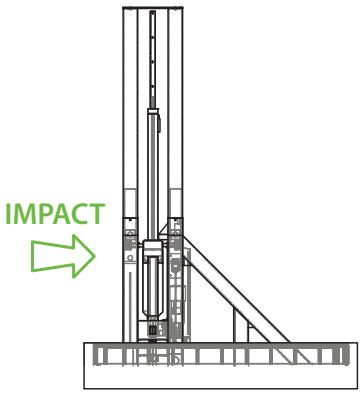

FEATURES

- Physically impact tested to PAS 68 criteria
- Manufactured from heavy gauge materials
- Variable height and clear widths
- Manual operating override facility
- High quality coating system (minimum galvanised)
- Shallow mounting less than 500mm overall depth
- Hold to run operation

BENEFITS

- Confidence in proven performance
- Strong and durable
- Flexibility to suit site requirements
- Operational under power failure conditions
- Reliable and dependable
- Overcomes site depth restrictions
- Safe operation

Physical Dimensions:	Standard gate height 2400mm - additional razor wire/cladding can be added for additional height. Standard sizes - clear width openings/gap of 5m, 6m and 7m Bespoke sizes available on request, subject to conditions, contact our sales department for advice
Basic Power Requirements:	Subject to gate size and construction
Impact Absorption	1189KJ
Full PAS 68 Classification:	V/7500(N2)/64/90:0.0/0.0
Tested Model:	Sliding gate with clear opening gap of 7000mm and a height of 2400mm + 1000mm sacrificial razor Wire topping = total overall height of 3400mm and foundation depth of 470mm
Speed of Operation:	5.7 seconds per metre (optional high speed operation 2 second per metre is available)
Operating temperature range available (option):	-25°C - +70°C

The gate comes with a hold to run control as standard. This is a specialist high security product and is designed for use with vehicles only and a full site risk assessment must be carried out at design stage to ensure that all relevant safety systems are included.

We strongly recommend that the barrier is within sight of the barrier controller at all times and that a recordable CCTV system is in use. For safety reasons pedestrians, cyclists and motorcycles should not use a barrier controlled roadway.

OPTIONS AVAILABLE

- 2 second per metre high speed operation
- Emergency buttons with lock down
- Inductive loop detectors
- Access and intercom systems
- UPS backup for the electrical system
- Ballistic resistant cladding
- Safety edges, safety beams & obstacle scanners
- Traffic lights and back-indications systems
- Infill panels, serrated / barbed wire toppings

SECURITY GATES

SG1500CR Armoured Vehicle Gate

Avon SG1500CR High Impact Sliding Armoured Vehicle Gates provide a high level of security against unauthorised vehicle access.

The SG1500CR gate was first independently physically tested by the Transport Research Laboratory (TRL) using an N3 European truck in accordance with the PAS 68 specification (7,500kg weighted vehicle travelling at 80kph) and post-test achieved zero penetration. The same gate was then crash tested with a 4x4 pick-up truck travelling at 80 kph and zero penetration was achieved.

The gate design was then aesthetically enhanced by removing the front two support legs and independently tested by the Transport Research Laboratory (TRL) with a US truck (15,000lb truck at travelling at 50 mph) in accordance with the US Standard ASTM F 2656 (supersedes DoS SD-STD-02.01) again the gate stopped the vehicle and zero penetration was achieved.

Please note this is a specialist high security product and is designed for use with vehicles only.

PRODUCT SPECIFICATION

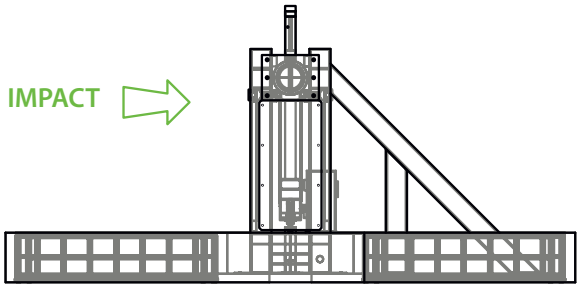

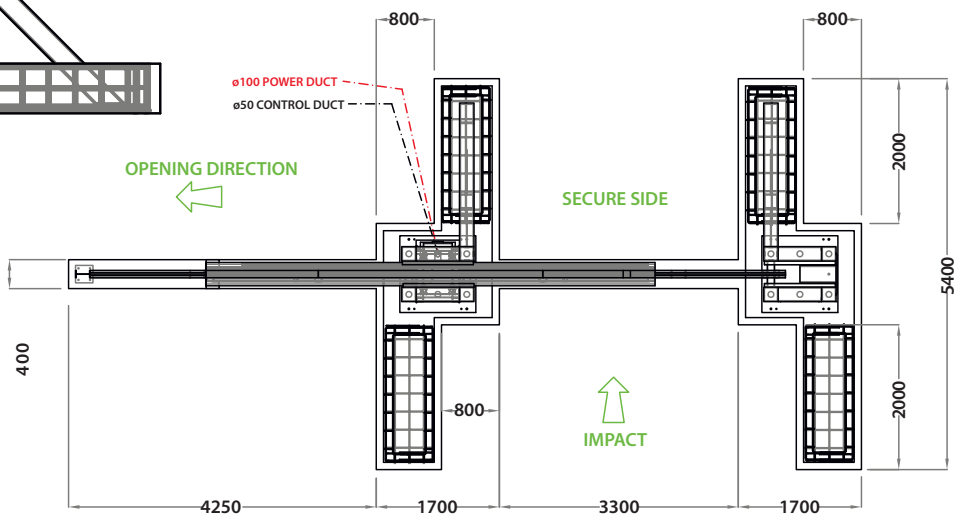

FEATURES

- Physically impact tested to PAS 68 criteria and ASTM F 2656 criteria
- Manufactured from heavy gauge materials
- Variable height and clear widths
- Manual operating override facility
- High quality coating system (minimum galvanised)
- Shallow mounting less than 500mm overall depth
- Hold to run operation

BENEFITS

- Confidence in proven performance
- Strong and durable
- Flexibility to suit site requirements
- Operational under power failure conditions
- Reliable and dependable
- Overcomes site depth restrictions
- Safe operation

Physical Dimensions:	The tested model has a clear width opening of 4m, please contact our sales department for alternative dimensions
Basic Power Requirements:	Subject to gate size and construction
Impact Absorption	1189KJ
ASTM F2656-07 Classification:	M50 P1
Full PAS 68 Classification:	V/7500(N3)/80/90:0/0 V/2500(N1G)/80/90:0/0 (4x4 pickup truck)
Tested Model:	Sliding gate Overall width 6.2m 2.2m high - clear width opening of 4m
Speed of Operation:	6 to 8 seconds per metre
Operating temperature range available (option):	-25°C - +70°C

The gate comes with a hold to run control as standard. This is a specialist high security product and is designed for use with vehicles only and a full site risk assessment must be carried out at design stage to ensure that all relevant safety systems are included.

We strongly recommend that the barrier is within sight of the barrier controller at all times and that a recordable CCTV system is in use. For safety reasons pedestrians, cyclists and motorcycles should not use a barrier controlled roadway.

OPTIONS AVAILABLE

- Matching infill panels
- Emergency buttons with lock down
- Inductive loop detectors
- Access and intercom systems
- UPS backup for the electrical system
- Obstactle detection scanners
- Safety edges, Safety beams
- Traffic lights and back-indications systems
- Serrated / barbed wire toppings

SECURITY GATES

Garrison Ballistic Protection Gate

The Avon Garrison Ballistic Protection Gate provides a high level of security against unauthorised vehicle access and the threat of armed attack.

The sliding gate incorporates a ballistic armour protection system that has been independently tested to BS EN 1522:1999 protecting against a level FB6 or FB7 (option) weapon attack.

The gate is available in range of gate heights, clear widths and foundation depths are under 500mm.

Designed to withstand extreme aggressive attacks while maintaining a pedestrian secure environment.

The gate comes with a hold to run control as standard.

Where the gate is fully clad, the operator must have clear visibility of both sides of the gate before operating. We strongly recommend the fitting of safety systems as well as a recordable CCTV system.

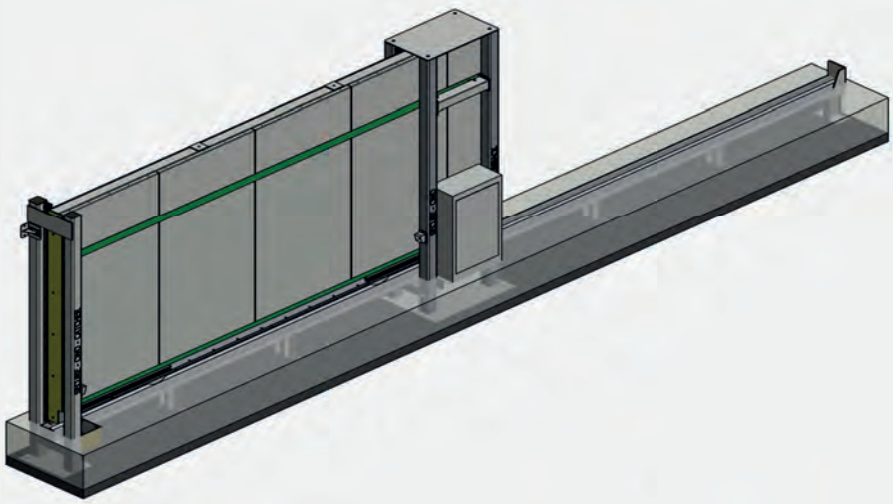

PRODUCT SPECIFICATION

Drawings are indicative examples only

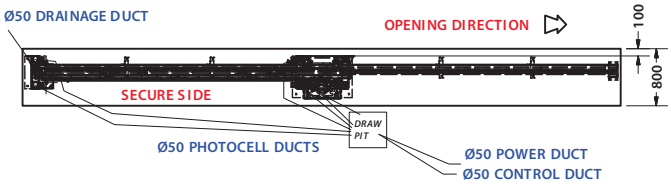

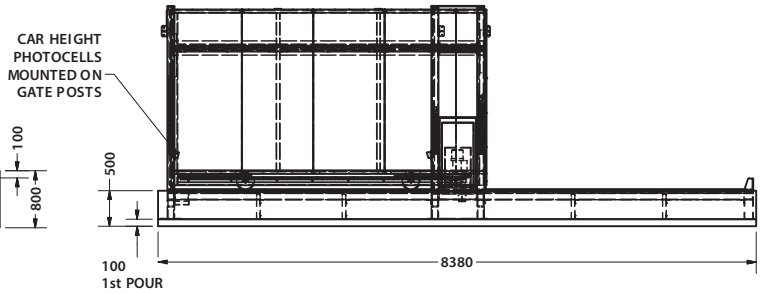

FEATURES

- Independently tested ballistic protection material
- Multi-hit capability
- Variable height and clear widths
- Manual operating override facility
- High quality coating system
- Shallow mounting less than 500mm overall depth
- Hold to run operation

BENEFITS

- Confidence in proven performance
- Strong and durable
- Flexibility to suit site requirements
- Operational under power failure conditions
- Reliable and dependable
- Overcomes site depth restrictions
- Safe operation

Physical Dimensions:	Standard gate height 2.1m from floor level Overall gate height 2.2m (100mm is below floor level) Standard gate lengths - 4m - 10m (500mm increments) Bespoke sizes available on request, subject to conditions, contact our sales department for advice
Basic Power Requirements:	Subject to gate size and construction
Speed of Operation:	6-8 seconds per metre (optional high speed operation 2 second per metre is available)
Operating temperature range available (option):	-25°C - +70°C

FB6 or FB7 Classification Ammunition Requirement:

Classification	Calibre	Bullet	Bullet Mass	Required Velocity
FB6	7.62 x 51mm	FMJ/PB/SC	9.5 ±0.1gr	830 ±10 m/s
FB6	5.56 x 45mm	FMJ/PB/SCP	4.0 ±0.1gr	950 ±10 m/s
FB7	7.62 x 51mm	FMJ/PB/HC	9.5 ±0.1gr	830 ±10 m/s

Key:

FMJ - Full Metal Jacket
PB - Pointed Bullet
SC - Soft Core (Lead)
SCP - Soft Core (Lead) with Steel Core Penetrator
HC - Steel Hard Core >63HRC

Test Dates: 6/10/2016 & 21/11/2016

Test Classification:
Pass - "NS" No Splinters

OPTIONS AVAILABLE

- 2 second per metre high speed operation
- Emergency buttons with lock down
- Inductive loop detectors
- Access and intercom systems
- UPS backup for the electrical system
- Safety edges, Safety beams & Scanners
- Traffic lights and back-indications systems
- Toppings serrated / barbed wire / electric

Please note this is a specialist high security product and is designed for use with vehicles only and a full site risk assessment must be carried out at design stage to ensure that all relevant safety systems are included.

All ballistic protection gates manufactured and supplied outside the UK are subject to a project specific export licence being granted by the UK Government.

Avon Barrier Support

Avon Barrier's significant experience in the perimeter security market, make them an ideal partner to work with and are proficient in all aspects of project implementation from concept system design through equipment design / manufacture to installation and maintenance support.

Avon Barrier has a clear aim to provide a complete solution to their clients security needs by developing long term relationships it can advise and design solutions to the ever increasing burden of security.

Our network of offices and approved installers worldwide enables us to offer global operational support on a more local basis.

CONSULTANCY / DESIGN

- Advice
- Solutions
- Expertise
- Site Surveys
- Manufacturing
- Product Development
- Partnerships
- Bespoke Designs

PROJECT MANAGEMENT

- Client Partnership
- Estimating
- Progress Reports
- Quality
- Site Preparation
- Civil Works
- Installation
- Commissioning

TECHNICAL SUPPORT

- Worldwide Technical Suport Engineers
- On-line Drawings & Manuals
- Training
- Fault Diagnosis
- Telephone and on-line support

AFTER SALES CARE

- Worldwide First Line Service Engineers
- Extended Warranty
- Service Response & Maintenance Contracts
- Spares & Parts Department

Preventative Maintenance Plans

Buying a system from Avon Barrier automatically offers you a 12 months parts warranty.

Onsite maintenance and breakdown call outs can be covered under a preventative maintenance plan.

All of Avon Barrier's products will require routine maintenance to maximize life expectancy and prevent premature wear.

(NB the equipment warranty is subject to evidence of maintenance in accordance with equipment O&M Manual).

Contact Us

Avon Barrier Corporation Ltd.
149 South Liberty Lane
Bristol BS3 2TL
United Kingdom

T: +44 (0)117 953 5252

E: sales@avon-barrier.com
W: www.avon-barrier.com

Avon Barrier

Quality Security Solutions

Avon Barrier Corporation Ltd.
149 South Liberty Lane
Bristol BS3 2TL
United Kingdom

T: +44 (0) 117 953 5252 | F: +44 (0) 117 953 5373
E: sales@avon-barrier.com | W: www.avon-barrier.com

PLEASE RECYCLE