Shoreline SL003 back to back

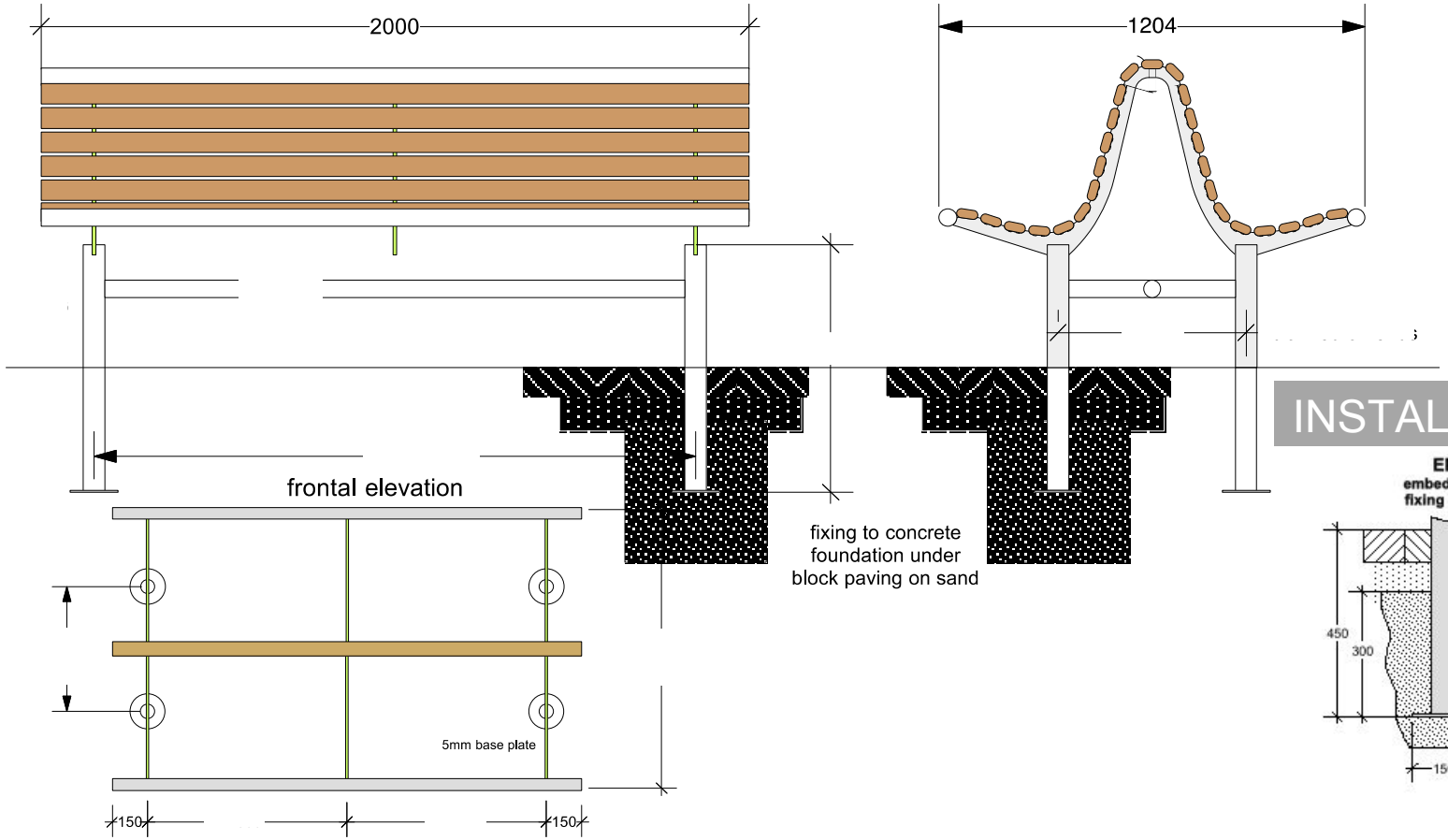

INSTALLATION METHODS

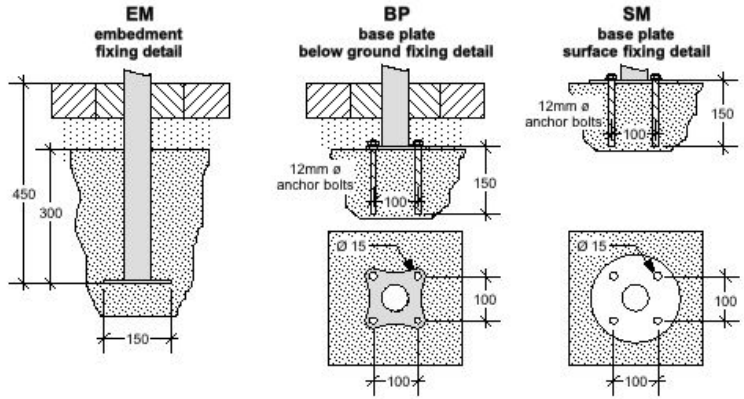

DIMENSIONS

LWH	Length 2000mm Width 1204mm Height 848mm

EXTRAS

AR	Arm rests – Anti skate

FINISH CODES

IR	Iroko FCS approved
DF	Douglas Fir FCS approved
BD	Bespoke dimensions available

INSTALLATION CODES

EM	Embedment fixing
BP	Base plate below ground fixing
SM	Base plate surface fixing

Benchmark design
Street furniture

www.benchmark-ltd.co.uk

Tel. 01243 545926 sales:info@benchmark-ltd.co.uk

Fax: 01243 545453 technical: mark@benchmark-ltd.co.uk