FOUNTAIN DESIGN GUIDE

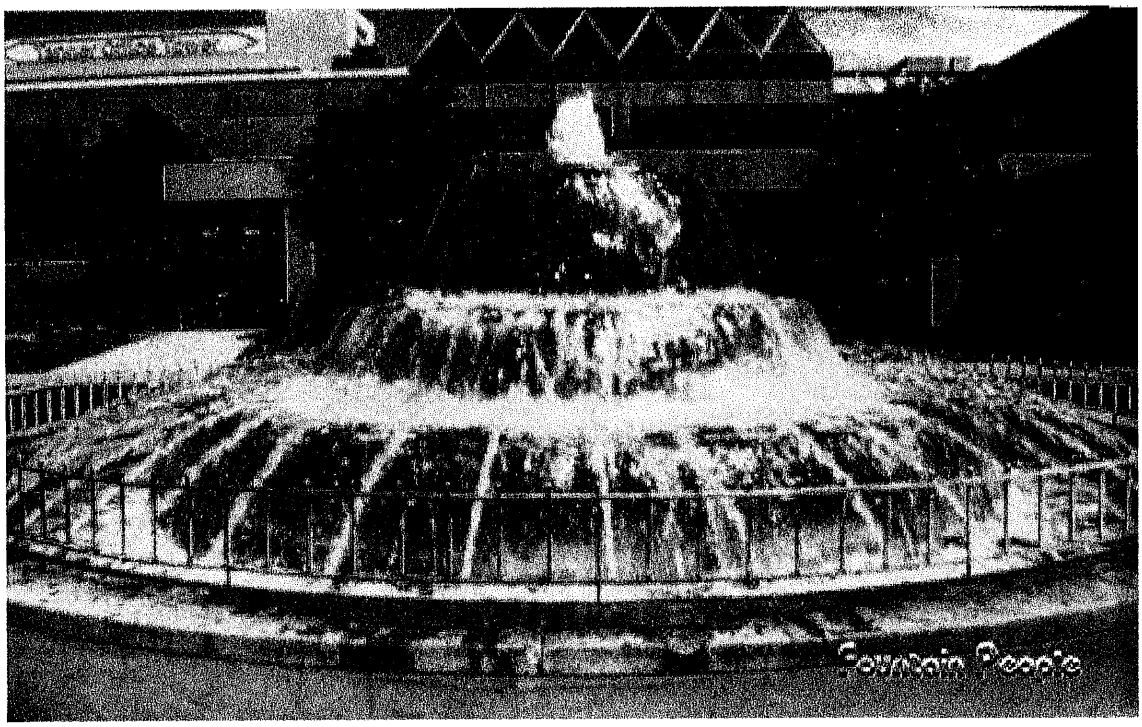

Prepared by:
Fountain People, Inc.
4105 Hunter Business Park
San Marcos, Texas 78666
Tel: 512.392.1155
Fax: 512.392.1154
www.fountainpeople.com

TABLE OF CONTENTS

APPENDICES

INTRODUCTION

Water - the ultimate medium for the creation of an architectural masterpiece. Water appeals to all of our senses by adding life to an environment with the added dimensions of sound and movement. When used effectively an architectural fountain can enhance and add focus to a project, distinguishing it from the ordinary.

The Fountain People, Inc. believe that the creation of an architectural water feature should have no limitations other than the designer's imagination. Our many years of experience and in-house design testing facilities provide us with a unique insight into the design of successful water creations.

This Fountain Design Guide has been designed for the sharing of that insight. Our intent is to assist you in better understanding the design elements that result in a successful fountain design.

Who are the Fountain People?

The Fountain People, Inc. was founded early in 1987 with three owner/employees in a 3,000 square foot building. Today (Fall 2003) we have over 60 employees and more than 20,000 square feet under roof.... and we are still growing!

The Fountain People, Inc. was founded with the objective of offering Specifiers and Owners an alternative in the design and installation of architectural water features. Our strategy has been to create a single source for both design and water feature development, and to back it up with a high quality manufacturing capability. This unique ***total service*** approach has been extremely successful and, in its relative short history, The Fountain People, Inc. has grown to be the largest fountain company in the nation. Today our team of experienced professionals continues to dedicate our efforts to making your design vision a predictable reality. We look forward to serving your fountain design needs and understand that you are our future.

CHAPTER ONE:

BASIC ELEMENTS OF A FOUNTAIN

All fountains regardless of their size, shape and complexity share several basic design elements. These elements typically include: (a) the visual water effect device(s), that may be a nozzle or, in the case of a simple waterfall, merely an open ended pipe; (b) a recirculating pump which supplies water to the visual effect; (c) a water filter to maintain water clarity; (d) a piping system to carry fountain recirculated and filter waters between the fountain equipment and the basin; (e) specialized pool fittings for introducing and removing water from the basin; and some provision for filling and draining the fountain basins. A fountain may also utilize a variety of additional specialized elements such as wind control systems or underwater lighting fixtures and junction boxes for illumination of the fountain. While not all fountains will incorporate all of these elements, most designs will require a majority of these basic elements.

This Fountain Design Guide describes not only how all of the various elements function also offers important considerations and guidelines to be used in the creation of a total fountain design. The following diagram illustrates the basic elements of a simple fountain system. The fountain shown below utilizes a direct burial vault system that contains the recirculating pump, a filter, and the electrical controls for controlling water level, pumps, and lighting. (See Chapter Two for more detailed information.)

1) Fountain Vault System
2) Nozzle
3) Filter Discharge Fitting
4) Pump Suction Fitting
5) Pool Drain Fitting
6) Wall-Mounted Overflow & Water Level Sensor
7) Automatic Water Fill Valve
8) Water Supply Isolation Valve
9) Underwater Lighting Fixtures
10) Lighting Junction Box
11) Water Fill Valve Junction Box

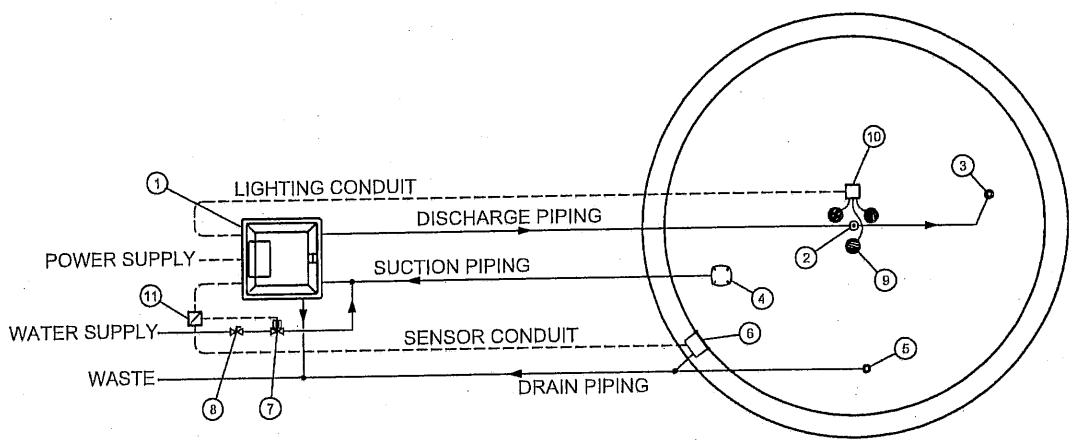

Figure-1. Typical Fountain Plan

CHAPTER TWO:

THE EIGHT BASIC STEPS IN FOUNTAIN DESIGN

Given the virtually infinite design choices available, no two fountains need be the same. However, all fountains require the same basic design considerations. Following the eight basic design steps will ensure the development of a predictable and successful water feature design. Failure to give proper consideration to any one step may result in an incomplete design and problems with either the final aesthetic element or with the fountain's operation. Each of the eight basic steps should be given careful and serious consideration. A design "check list" has been included as an integral part of this Design Guide (Appendix-A).

STEP-1: Establishing the Design Parameters

Every fountain has specific parameters that need to be considered in the development of the fountain's design. These parameters include: (a) the physical properties such as the fountain's size constraints; (b) the type of construction, finishing materials and, available mechanical space; (c) the ambient environment including relative wind exposure, operating temperatures and, in some cases, the humidity; and, (d) aesthetic considerations such as the size and shape of the water effects, desired sound levels and visibility relative to the distance and angles of view.

It will help to make a list of all relative design parameters for reference throughout the design development process. To better understand and appreciate the importance of these parameters, and to gain insight into how they effect design considerations, consider the following elaboration of the most relevant design parameters.

Physical Properties

Design begins with a physical space of defined size and shape. The constraints of this space will determine the most basic parameters for the fountain and, as will be defined later in this Design Guide, the basin size will establish the maximum height and size limitations of the visual water effects. Design development of the water effects and the fountain basins must be concurrent.

Parameters regarding the fountain's construction are also critical to the overall design. Questions such as, "will the fountain be built on grade or over structure", "what structures will be poured in place and/or pre-cast, "what types of finishing materials are planned" and "will their appearance change when they are wet?" The answers to these questions are important when making decisions about waterproofing, routing piping, and determining how pool fittings will be incorporated into the structure.

Often forgotten but of essential importance is the availability and location of a mechanical space. This space must be of adequate size to contain all of the necessary mechanical and electrical equipment with the necessary clearances for safety and maintenance. The equipment room or vault should be as close to the fountain as possible to minimize the cost of piping and must be at an elevation which is at or below the lowest fountain basin to avoid pump-priming problems. If there is no in-door equipment space available near the fountain then a suitable location should be established for the placement of a direct burial equipment vault.

Ambient Environment

Consideration of the ambient environment is essential to the design process for both indoor and outdoor installations. While it is easy to understand the importance of planning for environmental variables such as wind speed on an outdoor fountain, environment must also be considered in indoor installations. Air movement problems can also occur in buildings as a result of ventilation openings where strong drafts may result from pressure differences between the inside and outside of the building.

The variables of air temperature and relative humidity must also be considered in the design process. An outdoor fountain that will be operated for extended periods during the winter in areas subject to freezing must be designed with this fact in mind. Simply protecting the fountain and its equipment from freeze damage is not enough. Consideration must also be given to the safety of pedestrians who might slip on ice that can accumulate on walk areas near the fountain. Overspray and mist blown from the fountain by winter winds are going to result in ice forming around the fountain long before the recirculating fountain waters are in danger of freezing.

Relative humidity can be important in both indoor and outdoor installations. Indoor fountains located in confined interior spaces or and those with a significant aeration factor may elevate air humidity to uncomfortable levels. On the other hand, in areas of the country where the humidity is less than 20%, you may want to minimize the surface areas of pools to reduce the loss of water due to evaporation. "Dry basin" – also known as "hidden basin" or "zero depth" – fountains which do not utilize an open or obvious pool, are often used in these areas. This design method normally utilizes a subterranean tank instead of an open basin for storage of fountain's water.

Aesthetic Considerations

The aesthetic criteria of a water feature largely determine the various components of its design. While the aesthetic design includes the shape and finish of the fountain's structure, in this Guide we will deal primarily with the water elements. Key elements are the shape and height of the water effects, sound level, consideration of the points from which the fountain will be viewed. The shape and height of the visual element should be established based upon the designer's aesthetic intent and should also take into consideration the size of the pool basin, anticipated wind levels, and other factors that may impact the final installation.

Sound level is an important design consideration. On an outdoor installation a higher sound level may be desired to draw attention to the water feature or to mask undesirable background noise. With indoor installations, however, water effects should be selected which possess more subdued sound characteristics so they do not overpower their environment or interfere with normal conversation.

The visibility of a water feature should be studied with respect to its anticipated viewing points, e.g., how will the entry fountain in front of a twenty-story office building look from both the first floor lobby and the eighteenth floor? If a fountain is to be viewed from a distance, it will be important that the water effects are of sufficient scale to be visible (see STEP-3, Selecting the Aesthetic Water Elements, Page 9.)

STEP-2: Considering Basic Design Guidelines

There are certain basic guidelines for the design of water features that should be considered to be "unbreakable". These guidelines are derived from many years of practical experience and, by following them, a designer will be able to avoid many potential problems.

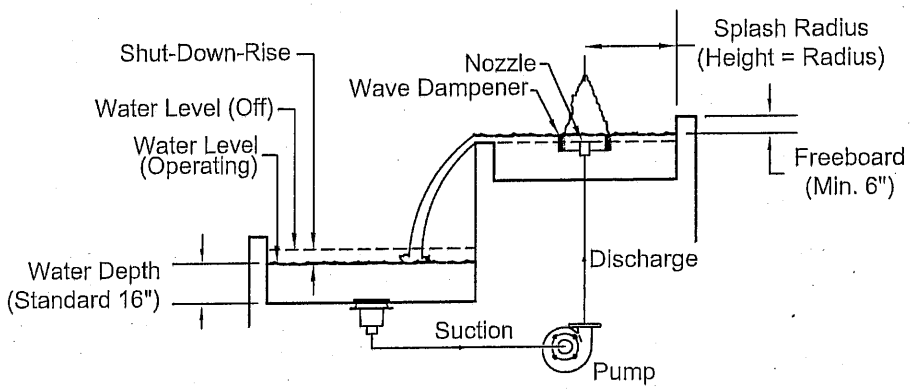

Figure-2. Important Design Parameters

1. ***The spray height of a nozzle should not exceed the distance from the nozzle or water element to the nearest pool wall.***

   This rule derives from the fact that the splash radius for most water elements does not normally exceed the spray height. For example, if a nozzle has a spray height of 10 feet, then the splash radius can be expected to be confined within a 10-foot radius of the nozzle. Therefore the nearest pool wall should be at least 10 feet from the nozzle in order to avoid over-spray. If the pool wall were closer, over-spray should be expected and, the closer the wall the greater the over-spray. It is important to note that this guideline is only valid when wind speeds are low - less than 10 MPH. In cases where moderate to high wind speeds are anticipated, the distance to the nearest pool wall should be increased by 10% for each MPH over a 10 MPH base wind speed. If higher wind speeds are only going to be an occasional problem, a wind control system should be considered. A wind control system monitors the ambient wind speed and changes the operating characteristics of the fountain as required during high wind conditions (see Chapter Four, Designing with Wind Control Systems, Page 27).

2. ***The minimum freeboard of any fountain basin, which contains a nozzle or receives a waterfall, should be 6". Reflecting pools, which contain no nozzle or wave producing elements, should have a minimum freeboard of 3".***

   Freeboard is the distance from the water level in a fountain basin to the top of the fountain basin wall. Most fountain basins will contain some wave action resulting from nozzles, waterfalls, or wind. Only indoor reflective pools have the potential of being exempt from this rule but, even in these cases a minimum of 3" freeboard is recommended to facilitate the installation of overflow fittings and water fill sensors.

3. ***Fountain basins should be designed with a minimum 12" and maximum 18" water depth.***

   These standards have been established based upon both hydraulic and safety considerations. While a fountain basin can be shallower than 12", design depths less than 12" will generally require the use of special inlet and outlet fittings for the recirculation and filtration of water. Most fountain pool fittings manufactured in the United States are designed for a nominal 16" water depth. Fountains with pool basins deeper than 18" are usually considered to be subject to swimming pool codes. It is recommended that local code requirements be verified on each project.

4. ***Fountains basins that will be subject to water level variations should only use "water level independent" type nozzles.***

   Some water feature designs will include basins that will be subject to variations in water level. Where this condition exists, "water level independent" type nozzles are suited to the application. "Water level dependent" nozzles should not be used as their performance will be adversely affected by changes in water level. The nozzle displays will generally become lower and wider as the water level rises and higher and narrower as the water level drops. If a water level dependent type nozzle must be installed in a basin with a fluctuating water level, it is recommended that the nozzle be mounted in relation to the lowest potential water level. It may also be desirable to increase the capacity of the recirculating pump in order to compensate for the additional resistance that will occur when the water depth over the nozzle is at its highest level.

5. ***When designing fountains with waterfalls, special consideration should be given to the variation of water levels in the pools as a result of water being displaced from the lower pool to the upper pool when the recirculating pump is operating.***

   In a waterfall fountain the lower pool water level will "drop" and the upper pool water level will "rise" when the pump is operated. The amount of drop and rise will depend on the flow rate, the length of the waterfall, and the surface areas of the upper and lower pools. These water level variations must be taken into consideration when establishing the elevation of water level "dependent" nozzles, overflow fittings, water level sensors, and pool freeboards (see, Chapter Three, Designing with Waterfalls, Page 24).

6. ***Do not use small orifice nozzles in lakes or other applications where a filtration system is not planned.***

   The use of small orifice nozzles is not recommended in non-filtered installations due to their high potential for clogging. Lake and similar installations of this type should be designed with larger orifice nozzles to reduce or eliminate unnecessary maintenance.

7. ***Do not use nozzles or water effects that will create significant turbulence directly preceding a smooth sheet type waterfall or other effects sensitive to wave action.***

   "Water level dependent" nozzles such as Bubblers, Geysers, and Cascades, create surge and wave action within a body of water. Turbulence and waves will destroy or distort a clear sheet waterfall. If it is decided to use a wave-producing nozzle preceding a sheet waterfall, a wave baffle or surge dampening device should be incorporated into the design. As these devices are difficult to hide, it may be desirable to avoid their use.

8. ***If Bubbler, Geyser, or Cascade nozzles are to be used in circular or symmetrically shaped pools a surge or wave-dampening device should be included.***

   Bubbler, Geyser, and Cascade nozzles will frequently create an oscillating wave or surge action in a circular or symmetrically shaped pool. This oscillating pattern can be cumulative and will magnify until the display is completely destroyed and water is splashed from the pool. Elimination of the oscillating surge effect can only be accomplished by breaking the cycle with a wave or surge dampener that encircles the nozzle. While the design of the dampener device will be specific to the requirements of the installation, the most effective means of controlling surge and waves is to incorporate a wall around the nozzle with the top of the wall flush with or slightly above the water surface. This submerged wall acts somewhat like a sandbar at the beach in that it breaks the wave cycle and releases its energy. Another method for controlling waves is to use an adjustable freestanding wave baffle. This type of device usually takes the form of a cylinder, fabricated from brass or stainless steel sheet, 2' to 3' in diameter, 6" to 12" high, and mounted to the pool floor around the nozzle using adjustable legs. Like the submerged wall, the top edge of the cylinder is adjusted so that it protrudes slightly above the water surface and thus breaks the surge and wave cycle. The cylinder method is typically used as a retrofit device. The submerged wall is the recommended and more effective design option.

9. ***Avoid the use of nozzles with delicate patterns, clear sheet waterfalls, laminar flow jets or fog type water effects in outdoor installations that are exposed to the wind.***

   These types of visual effects are easily distorted or destroyed by wind speeds as low as 5 MPH. Since such minimum wind speeds are almost always present in an outdoor installation, the use of these types of water effects is only recommended when the fountain is completely protected from the wind. While automated wind control systems may be used to turn off sensitive effects during windy periods, it may not de desirable to utilize a water effect that will operate only a small percentage of the time.

10. ***Use dark colored surfaces on underwater pool surfaces.***

Dark colors on underwater pool surfaces will increase the appearance of depth and mystery in a fountain. When dark surfaces are used, the eye tends to focus on the surface of the water and not on the pool floor. All fountains, regardless of how well they are maintained, will often have some sediment or debris on their pool floors. Light colors tend to accentuate trash or sediment on the underwater pool surfaces and detract from the overall aesthetic element. The best colors for underwater surfaces are black, dark grays, greens and dark blues.

11. ***Avoid the use of large pool surfaces or fog effects in areas of very low humidity which are subject to water conservation restrictions.***

In areas where the relative humidity is very low, generally below 30%, the use of large pool surface or fog in a fountain's design will greatly increase the evaporation rate and will produce a cooling effect near the fountain. In some cases this cooling effect may be part of the design intent, however, in areas where water conservation is critical, these characteristics should be avoided (see, STEP-8 in this chapter for more information regarding the calculation of water loss due to evaporation).

1. ***Do not use corrosive materials such as steel or aluminum in fountain basins or mechanical/electrical systems.***

Only stainless steel, bronze, brass, copper, or fiberglass should be utilized within fountain basins and the plumbing system. Some plastics, such as PVC, are suitable for use in the mechanical system but, because many plastics deteriorate when exposed to sunlight, care should be used in their use. While aluminum is typically considered to be a non-corrosive material, it is vulnerable to attack when exposed to chlorinated water, which is commonly used for algae control in most fountains. The use of steel should be minimized but when piping is routed within a building, most fire codes require the use of metallic pipe. When steel is used, the steel pipe should be plastic lined to increase its longevity and reduce rust contamination of fountain waters.

The determination of which material to use will largely be based on its intended purpose. For example, in the pool basin only bronze, brass or copper should be used but, if appropriate to match sculptural elements or finishing materials, stainless steel is an equally suitable choice. Regarding material selection in the mechanical system, there are recommendations contained under this Section (see STEPS-4 through 6, Pages 14-20).

STEP-3: Selecting the Aesthetic Water Elements

All water elements or "effects" can be categorized into one of four basic groups. These groups are: Aerated effects; Solid Stream effects; Sheet effects; and Mist or Fog effects. Water effects in each of these groups have specific and different visual and operational characteristics. These should be considered in the selection process to ensure that they are compatible with the fountain's physical parameters established in Step-1. Thoughtful consideration of these characteristics relative to the physical parameters will ensure a successful design.

There are six basic characteristics that should be considered when selecting effects including: the amount of aeration (whiteness); the level of sound desired; the normal splash radius; wind resistance; clogging potential; and water level dependence (all nozzles are either water level independent or dependent). Correct operation of water level dependent nozzles is determined by relationship to water level. Other characteristics that may be relevant to the selection process would be spray height limitations of effects and their physical sizes. To determine the appropriate size of a particular nozzle based on a desired spray height See Appendix-C. Following is a brief description and summary of the characteristics of each of the most frequently used nozzles by

group. Waterfalls have been omitted due to their unique characteristics and only nozzles have been included (see Chapter Three, Designing with Waterfalls, Page 24).

Aerated Effects

Aerated water effects are those which "aerate" water. Aeration is created by mixing air and water to produce a white and foamy water element. Aerated effects are the most visible of all water effects and also possess a higher sound level emission than most other elements. Due to their inherent good visibility, high sound level, moderate wind resistance, and typically larger orifices, Aerated nozzles are ideal for outdoor and lake applications.

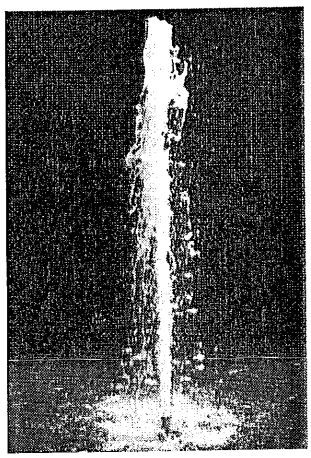

Aerator

The Aerator creates a very concise column of highly aerated water with a foamy crown at its tip. Aerator nozzles are available in both water level dependent and independent designs. The Aerator can be utilized as a solitary element or in clusters to create massive white aerated columns.

Aeration: Excellent
Sound Level: Moderate to High
Splash Radius: 1.0 x Spray Height at 10-MPH Wind Speed
Wind Resistance: Fair to Good
Clogging Potential: Low to Moderate
Water Level Dependent: Available in Either Type
Normal Operating Heights: 2 to 50 Feet
Pattern Height to Width Ratio: 4 to 1

Bubbler

The Bubbler nozzle is most commonly used to create massive mounds of highly aerated water. At lower heights below 3' Bubblers are the most wind resistant of all vertical water effects. At higher heights the pattern is less dense but very wide and visible from a distance. Used in clusters, the Bubbler can create mountains of aerated water. When used in round of symmetrical pools, surge may occur and a wave baffle is recommended.

Aeration: Excellent
Sound Level: Moderate to High
Splash Radius: 1.5 x Spray Height at 10-MPH Wind Speed
Wind Resistance: Good to Excellent
Clogging Potential: Very Low
Water Level Dependent: Yes (Surge Potential)
Normal Operating Heights: 1 to 20 Feet
Pattern Height to Width Ratio: 1.5 to 1

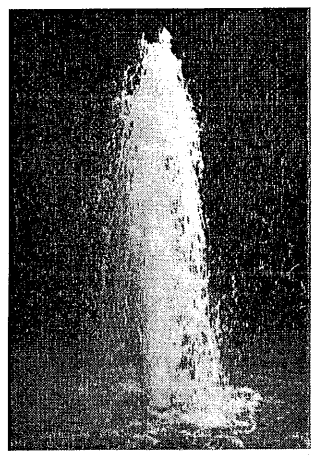

Cascade/Geyser

The Cascade or Geyser creates a pine tree shaped column of white aerated water. This type of nozzle is an ideal choice when broad aerated columns at significant spray heights are desired. Like the Bubbler nozzle, the Cascade is water level dependent and surge can occur if nozzles are used in symmetrical pools without a wave baffle.

Aeration: Excellent
Sound Level: Moderate to High
Splash Radius: 1.5 x Spray Height at 10-MPH Wind Speed
Wind Resistance: Good to Excellent
Clogging Potential: Very Low
Water Level Dependent: Yes (Surge Potential)
Normal Operating Heights: 1 to 20 Feet
Pattern Height to Width Ratio: 1.5 to 1

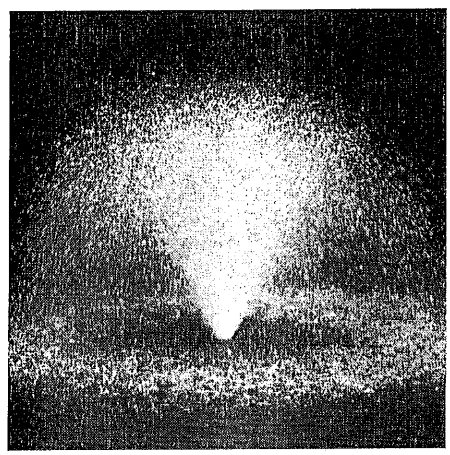

Snowball

The Snowball creates a large dense ball shaped pattern of highly aerated water droplets using an internal impeller that is powered by the water flowing through the nozzle. The pattern is highly visible and is moderately wind resistant. The nozzle is water level independent and not subject to surge.

Aeration: Excellent
Sound Level: Moderate to High
Splash Radius: 2.0 x Spray Height at 10-MPH Wind Speed
Wind Resistance: Fair to Good
Clogging Potential: low
Water Level Dependent: No
Normal Operating Heights: 2 to 8 Feet
Pattern Height to Width Ratio: 1 to 2

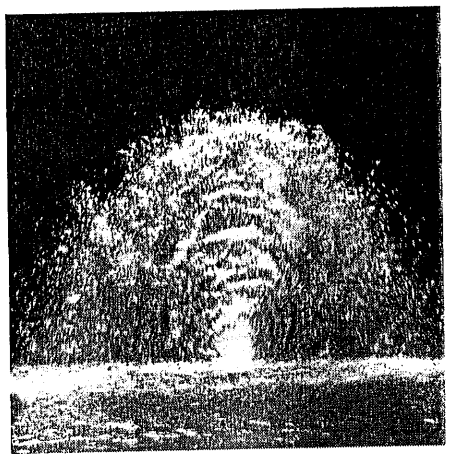

Peacock

The Peacock nozzle creates a fan shaped pattern of aerated water similar to that peacock's tail feathers. Due to its unique shape, the pattern looks quite different depending on the viewing angle. The nozzle is water level dependent and subject to distortion if water level varies. Large waves are present but the nozzle itself does not tend to create wave turbulence.

Aeration: Excellent
Sound Level: Moderate to High
Splash Radius: 1.5 x Spray Height at 10-MPH Wind Speed
Wind Resistance: Fair to Good
Clogging Potential: Very Low
Water Level Dependent: Yes (Wave Sensitive)
Normal Operating Heights: 3 to 12 Feet
Pattern Height to Width Ratio: 1 to 1.5 (Thickness 0.33)

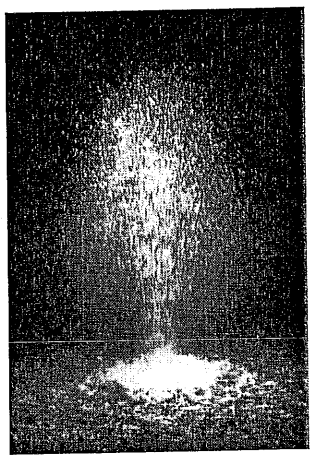

Chandelier

The Chandelier creates a pine tree shaped column of very small aerated water droplets using a water powered impeller within the nozzle. The pattern is translucent and fairly delicate making it somewhat wind sensitive. This nozzle is water level dependent and is sensitive to wave distortion but does not typically create surge or waves.

Aeration: Excellent
Sound Level: Moderate to High
Splash Radius: 1.5 x Spray Height at 10-MPH Wind Speed
Wind Resistance: Poor
Clogging Potential: Low to Moderate
Water Level Dependent: Yes (Wave Sensitive)
Normal Operating Heights: 2 to 8 Feet
Pattern Height to Width Ratio: 1 to 1.2

Precision Effects

Precision jets, often referred to as "solid stream" or "smooth bore" nozzles, create a solid stream of clear non-aerated water. These nozzles can be used as a solitary effect or used in groups to create patterns or shapes. This type of lends itself to the creation of multi-stream patterns because of the precision of its stream. Due to this precise stream control, this jet is capable of spray heights hundreds of feet high.

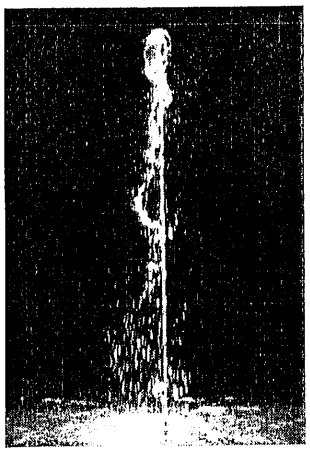

Precision

The Precision jet creates a single stream pattern which, when vertically aligned, produces a clear boil at its tip. Precision nozzles can be used individually or in multiples to create patterns or shapes such as an arch, dome, curtain, or wall.

Aeration: Minimal
Sound Level: Moderate
Splash Radius: 1.0 x Spray Height at 10-MPH Wind Speed
Wind Resistance: Fair
Clogging Potential: Low
Water Level Dependent: No
Normal Operating Heights: 2 to 90 Feet
Pattern Height to Width Ratio: 5 to 1

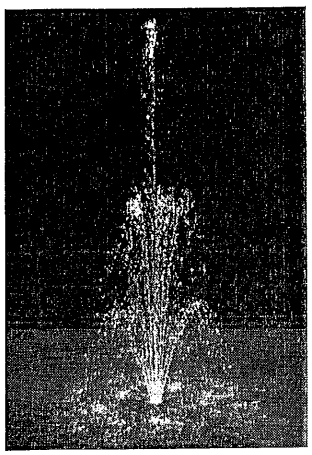

Water Castle

The Water Castle Nozzle utilizes a number of small precision nozzles to produce a "fleur-de-lis" pattern. This nozzle is an ideal choice where a single element is desired, as in a courtyard.

Aeration: Minimal
Sound Level: Moderate
Splash Radius: 2.0 x Spray Height at 10-MPH Wind Speed
Wind Resistance: Poor to Fair
Clogging Potential: Moderate
Water Level Dependent: No
Normal Operating Heights: 2 to 14 Feet
Pattern Height to Width Ratio: 1 to 2

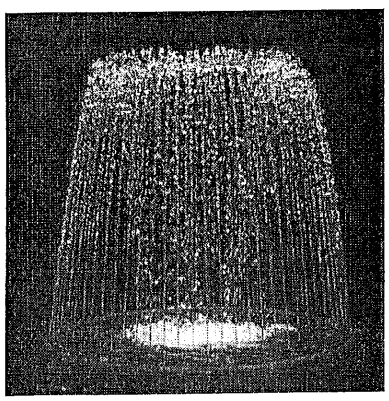

Spray Rings

Spray Rings are circular manifolds with multiple precision jets mounted around the ring. The precision jets can be aligned to create a wide range of different patterns and are used as both a single or accent effect.

Aeration: Minimal
Sound Level: Moderate
Splash Radius: 1.5 x Spray Height at 10-MPH Wind Speed
Wind Resistance: Poor to Fair
Clogging Potential: Moderate
Water Level Dependent: No
Normal Operating Heights: 2 to 25 Feet
Pattern Height to Width Ratio: Depends on Ring Diameter

Sheet Effects

Sheet water effects are characterized by a clear of translucent sheet of water. These sheets may emanate from a nozzle in a 360-degree circular pattern or they may be linear. Sheet effects are an excellent choice in intimate indoor applications due to their low sound levels and minimal splash. They are not recommended for installations that will be exposed to wind or drafts as they are extremely wind sensitive.

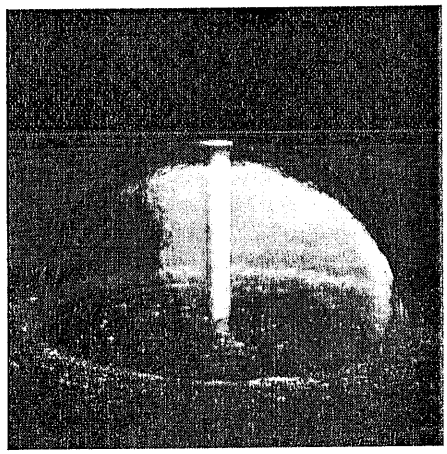

Crystal Dome Nozzle

The Crystal Dome nozzle produces a clear dome shaped sheet of water. The pattern is very delicate producing a sheet from 1/32" to 1/8" thick. This effect can be very soothing to the senses with little sound or splash but, like all sheet effects, is extremely sensitive to wind.

Aeration: None
Sound Level: Very Low
Splash Radius: 1.5 x Spray Height with No Wind
Wind Resistance: Extremely Poor
Clogging Potential: Moderate
Water Level Dependent: No
Normal Operating Heights: 2 to 2 Feet
Pattern Height to Width Ratio: 1 to 1

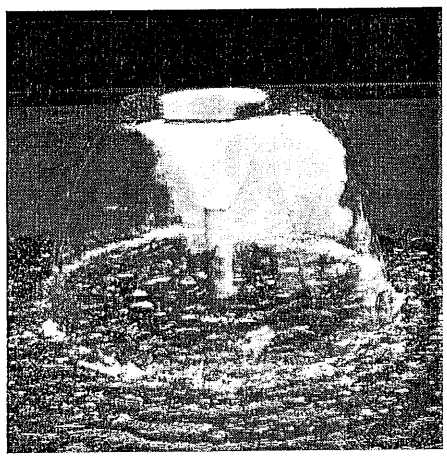

Morning Glory Nozzle

The Morning Glory nozzle creates a clear sheet of water in the shape of an inverted dome similar to a morning glory flower. Like the Crystal Dome, this nozzle creates a very thin sheet that is very wind sensitive but produces minimal splash and sound. Unlike the Crystal Dome, the Morning Glory can create two distinctive patterns. The nozzle can b operated at low pressure to produce its traditional "full-shee morning glory shape or at increased pressure to create a "half-sheet" pattern.

Aeration: None
Sound Level: Very Low (Moderate in Half-Sheet)
Splash Radius: 2-x Spray Height with No Wind
Wind Resistance: Extremely Poor
Clogging Potential: Moderate
Water Level Dependent: No
Normal Operating Heights: 2 to 2-1/2 Feet (Up to 15' Half-sheet)
Pattern Height to Width Ratio: 1 to 2.5

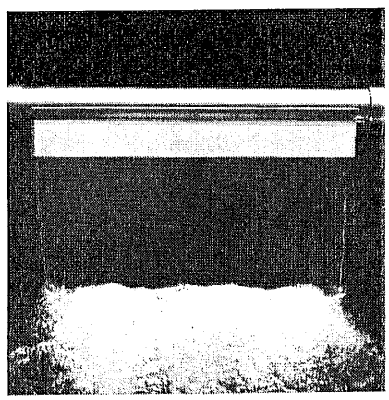

Clear Sheet Spray Bar

The Clear Sheet Spray Bar produces a thin clear sheet of water that may be projected straight down or at an angle of up to 75 degrees above vertical. Because the clear sheet bar is a pressurized manifold, the sheet will hold its shape even when projected upward. As pressure is increased, the sheet becomes less clear but remains translucent. When aligned straight down, a sheet bar can hold a solid sheet for more than five feet. This unique linear sheet nozzle can eliminate design barriers when a clear waterfall is desired but there is insufficient space to accommodate a source trough.

Aeration: None
Sound Level: Very Low
Splash Radius: Depends on Alignment
Wind Resistance: Extremely Poor
Clogging Potential: High (Requires Fine Strainer)
Water Level Dependent: No
Normal Operating Heights: N/A
Pattern Height to Width Ratio: N/A

Mist and Fog Effects

Mist and Fog effects consist of nozzles that create a very fine mist or fog. Both effects are very wind sensitive and create a "hissing" sound. These types of effects are normally used as either a "setting bed" for sculpture, as a support for larger effects, or to create an aura of mystery. Mist nozzles create tiny droplets of water that tend to suspend in the air momentarily and then fall to where they may be collected and recirculated. Fog nozzles create water vapor by passing water through a very small orifice at extremely high pressure. The majority of this water evaporates directly into the air. Fog nozzles are sometimes used to add comfort to an outdoor environment due to the cooling effect they produce through the evaporation of water. It is important to note that because water is lost directly to evaporation and is not recirculated the use of fog may be prohibited in areas subject to water conservation restrictions.

Mist & Fog Nozzles

Mist and Fog nozzles have similar characteristics with the exception that most of the water used by Mist nozzles can be collected and recirculated while most of the water used by Fog nozzles is lost to evaporation. Fog is vapor, and is therefore more likely to be carried by the wind than the water droplets created by Mist nozzles.

Aeration: None
Sound Level: Very Low
Splash Radius: 3 to 5 x Spray Height with No Wind
Wind Resistance: Extremely Poor
Clogging Potential: High (Requires Fine Strainer)
Water Level Dependent: No
Normal Operating Heights: N/A
Pattern Height to Width Ratio: N/A

STEP-4: Selecting and Sizing the Pumping System

The pumping system is comprised of: (a) a pump to re-circulate the water necessary to operate the water effects; (b) a suction strainer to collect leaves and other debris, and; (c) isolation and balancing valves to isolate the pump and strainer for maintenance and to balance flow to the various water effects. The pump and strainer are sized based on the flow capacity required by the combined water effects. The first step, therefore, is to determine the total requirements of the water effects to be used in the design. Valves are sized based upon the flow capacity of the pipe in which they are installed and generally will match the size of the piping. (See STEP-6, Select and Size the Piping System)

Determining Water Effect Requirements

There may be a variety of different water effects used within a fountain system, each having different flow and "head" or pressure requirements. These values must be added together to determine the total requirements of the fountain. Following is a step by step procedure for calculating the total requirement:

1. List all of the nozzles to be used in the fountain and group them based on, (a) their size and type, and, (b) their spray heights.

2. Using the charts in Appendix-C, list the flow rate in GPM and Head Pressure for each nozzle at its design operating height. Extend the GPM values based on the quantities of each of the nozzles. Do not extend the Head Values.

3. Add the extended GPM flow rates together to obtain the combined total flow rate required to operate all of the nozzles.

4. If the fountain also contains waterfalls, any supplemental water required by the waterfall should be added to the nozzle's total. Care should be taken in adding up flow requirements for waterfalls. For example: If a waterfall requires 200 GPM but, there are a group of nozzles contributing 150 GPM to the waterfall, only an additional 50 GPM should be added as supplemental flow (see Chapter Three-Designing with Waterfalls, Page 24).

5. Last, review the list of nozzles and determine which has the highest Head Pressure requirement. The nozzle with the highest pressure requirement sets the requirement for the system.

The total GPM requirement obtained is step #3 above, and the highest Head Pressure requirement determined in step #4, comprise the minimum performance requirements for the system.

Sizing the Pump & Strainer

Once the minimum performance requirements for the water effects have been determined, it is possible to size the pump and strainer. Following is a simple procedure that can be used for pump and strainer sizing:

1. To determine the pump total GPM flow capacity requirement, take the total flow requirement previously calculated for the water effects and add a minimum of 15%. This is the recommended safety factor ensure that the water effects performance will not diminish as the pump wears. A pump's performance will typically drop a minimum of 10% over the course of its effective life cycle due to wear.

2. Using the previously determined highest Head Pressure value, add an additional allowance of 30'. This allowance is necessary to ensure that there will be adequate pressure in the pump to both satisfy the water effects requirements and to off-set the friction losses created by the strainer, valves, fittings and piping. While an exact value for friction losses can be calculated based if exact piping lengths, type and quantities of fittings, and other factors are known, this specific information is not normally be available to the designer. The use of a standard allowance factor has proven to be an easy and reliable alternative for sizing of the pump where the pump will be located no more than 100' from the fountain basin. For greater distances a full piping calculation is recommended.

3. Using the GPM flow capacities and Head Pressure requirements calculated in steps 1 and 2, above, determine the pump and strainer sizes required with the charts contained in appendix-E, Pump & Strainer Sizing.

Selecting the Pump Type

Most water features utilize one of three types of pumps. These types are: (a) flooded suction; (b) self-priming, and; (c) submersible. Selection of the proper pump type will largely depend on the basic parameters of the fountain installation. Figure-3, below, illustrates the basic differences between these three pump types.

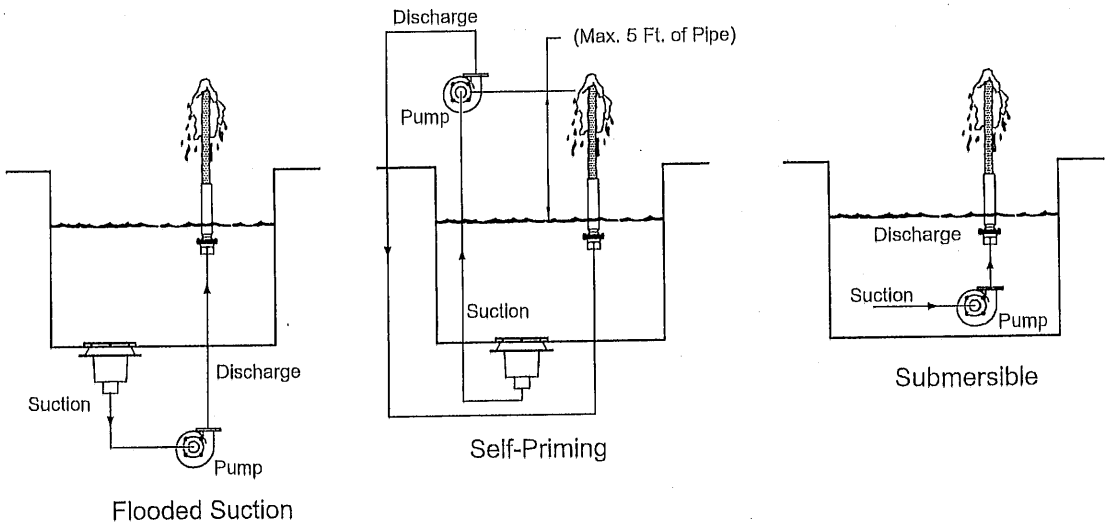

Figure-3. Typical Fountain Plan

Flooded Suction Pumps should be used whenever possible as they are the most efficient and cost effective of all pump types. This pump must be located at an elevation at or below the water level of the lowest fountain basin so that the suction piping and the pump volute are always flooded with water.

Self-Priming Pumps should be used when the pump absolutely must be located above the lowest fountain water level. A self-priming pump is capable of creating a vacuum on the suction piping that lifts water up to the pump. It is important to note that the capabilities of a self-priming pump are limited and that most pumps of this type are only efficient at lifting water five feet or less. Also, it is critical that as much of the suction line as possible be flooded and that the amount of air in the piping, that the pump will have to remove, be minimized. Lifting water to greater heights requires more costly pump designs operating a higher horsepower. It is almost always more cost-effective to relocate the pumping equipment to a location where a flooded suction pump can be used rather than to use a self-priming pump operating with more than a five foot lift.

Submersible Pumps are used when there is no equipment space available or there is no pump space available at a sufficiently low elevation to utilize either a flooded suction or self-priming pump. A submersible pump utilizes a sealed motor so that both the pump and motor are able to be installed underwater. Due to their construction these pumps are relatively expensive, are more difficult to maintain, and have a shorter life expectancy. It is also important to note that the size of submersible pumps that can be utilized in a fountain is limited by the National Electrical Code (NEC). The NEC prohibits the use of any electrically operated submersible equipment that is not protected by a Class-A ground fault circuit interrupter (GFCI). Current limitations in the sizes of Class-A protective devices available limits submersible pump motors to about five horsepower.

Construction Materials: Generally, pumps of three horsepower and less are readily available and cost-effective in bronze or plastic/composite construction. Larger pumps and strainers are typically constructed of cast iron. It is recommended that pumps larger than five horsepower be of bronze fitted cast iron construction. Bronze fitted means that the pump will be fitted with bronze internal parts but the housing will still be cast iron. Strainer baskets used with larger pumps will normally be of stainless steel.

STEP-5: Selecting and Sizing the Filtration System

Filtration systems are selected and sized based upon the volume of water contained within the fountain system with consideration given to maintenance and any water restrictions that may apply to the installation. While there are a number of different filter types, the two that are best suited for use in fountains are Sand Filters and Cartridge Filters. Both of these filters are considered "permanent media" type filters which means that the filter medium is designed for long term usage and does not have to be replaced each time the filter becomes dirty. To determine which filter type would be best for a given installation requires a basic understanding of how these two filters function and their various advantages and disadvantages.

Sand Filters utilize a volume of sand as the filter medium. Water is cleaned by forcing it through the sand that traps deleterious materials. One advantage to using a sand filter is its very low maintenance requirements. To clean the filter only requires circulating water through the sand in the opposite direction for about two minutes once or twice per week. This "backward" circulation for cleaning is called "backwashing" as it washes the sand by flushing accumulated dirt to waste. A disadvantage of the sand filter is that a significant amount of water is wasted each time the filter is back-washed. If a fountain installation will be subject to water conservation restrictions, then the use of a sand filter is probably not the best choice. However, if water conservation is not a priority, a sand filter can reduce operating cost by reducing the fountain's maintenance requirements.

Cartridge Filters use a polyester filter element as the filter medium. Water is filtered as it is pumped through the filter and, when the filter element becomes dirty, it must be removed from the housing and washed. Advantages of a cartridge filter include the fact that it is less expensive to purchase, requires less space to install, filters smaller particles from the water, and does not waste water by the backwashing process. If a fountain installation will be subject to water conservation restrictions, a cartridge filter is recommended.

Sizing a Filter System

In addition to the volume of water contained within the fountain basins system there are several other factors that should be considered when sizing a filter system. These factors include: (a) the amount of foliage which will overhang or border the basins, (b) the presence or lack of a wall at the edge of the feature to help prevent trash from entering, and, (c) the "cleanliness" of the general area in which the fountain will be located, i.e., will it be very dusty or, as would be the case if the fountain were located adjacent a food court area in a shopping mall, allowances should be made for the high volume of straws, paper, cigarettes, etc. which could be expected to end up in the fountain. Following is a step by step process for the sizing of a filter system for a decorative fountain:

1. First, calculate the combined water volume of all of the fountain basins. The easiest way to accomplish this would be to first calculate the volume in cubic feet and then convert it to gallons by multiplying by 7.48. Add 10% to your calculation to allow for water in the system piping.

2. Divide the total gallons of water contained within the fountain system by 360. This formula will convert the total gallons into the minimum flow rate in gallons per minute (GPM) required to circulate all the water in the fountain through the filter one time within a six hour period. This six hour "turn-over" rate will be adequate to maintain clean water in an average installation. If there are special considerations present, such as those listed above, a four hour turn-over should be used so you should divide the total gallons in the system by 240.

3. Using the turnover rate calculated in step 2, above, the required filter size can now be determined. The formula used to determine the filter size will be based on the type of filter that you have selected - Sand or Cartridge. If your calculated requirement exceeds the

capacity of the filters listed below, you can use multiple filter tanks. If this is not desirable, there are larger filters available and you should select the appropriate size using the filter manufacturer's selection information.

Sand Filters are designed to operate at a maximum rate of 20 GPM per square foot of filter medium. By dividing the turn-over rate calculated in step 2, above, by 20, the minimum square feet of filter medium required to satisfy the calculated turn-over rate can be determined. From the chart below, select the sand filter that provides adequate flow capacity:

18" Filter = 1.8 Sq. Ft. of Sand and is rated at a maximum of 35 GPM.
24" Filter = 3.1 Sq. Ft. of Sand and is rated at a maximum of 63 GPM.
30" Filter = 4.9 Sq. Ft. of Sand and is rated at a maximum of 98 GPM.
36" Filter = 7.1 Sq. Ft. of Sand and is rated at a maximum of 141 GPM.
48" Filter = 12.6 Sq. Ft. of Sand and is rated at a maximum of 251 GPM.
60" Filter = 19.6 Sq. Ft. of Sand and is rated at a maximum of 392 GPM.
72" Filter = 28.3 Sq. Ft. of Sand and is rated at a maximum of 566 GPM.
96" Filter = 50.3 Sq. Ft. of Sand and is rated at maximum of 1,006 GPM.

Cartridge Filters operate at a commercial rate of 3/8 GPM and a residential rate of 1 GPM per square foot of filter area. By dividing the turnover rate 0.375, the minimum square feet of filter medium required to achieve the desired turnover rate can be determined for a commercial installation. The residential minimum can be determined by dividing by 1. It is recommended that the commercial rate be used whenever possible to extend the length of time between filter cleanings. From the chart below, select the cartridge filter that provides adequate flow capacity:

Commercial Ratings:
25 Sq. Ft. of Filter Area = 9.4 GPM
50 Sq. Ft. of Filter Area = 18.8 GPM
75 Sq. Ft. of Filter Area = 28.1 GPM
100 Sq. Ft. of Filter Area = 37.5 GPM
150 Sq. Ft. of Filter Area = 56.3 GPM

Residential Rating:
25 Sq. Ft. of Filter Area = 25 GPM
50 Sq. Ft. of Filter Area = 50 GPM
75 Sq. Ft. of Filter Area = 75 GPM
100 Sq. Ft. of Filter Area = 100 GPM
150 Sq. Ft. of Filter Area = 150 GPM

Filter Construction Materials

Sand filters are available with stainless steel and fiberglass tanks on units up to 36" in diameter. Larger Sand filters are available with coated carbon steel and fiberglass tanks. The non-corrosive fiberglass tank type tank is recommended.

Cartridge filters are available with stainless steel, ABS, and fiberglass tanks with polyester filter elements.

STEP-6: Selecting and Sizing the Piping System

Piping is sized based upon its flow rate requirements and its function. There are four different types of piping used in a fountain: (a) suction lines, (b) discharge lines, (c) drain lines, and occasionally, (d) equalizer lines. Each type of line has a specific function and this function determines the basis for sizing. The final basis for sizing will be the velocity of the water within the piping, which is a function of flow rate relative to the size of the pipe. The chart in Appendix-D can be used to select the appropriate pipe size once the proper velocity has been determined.

Following are important guidelines for determining the appropriate velocities in the piping system:

Suction Piping is the piping through which water is drawn from the fountain basin to the pump. Because there is no pressure available to help a pump draw water through the suction line, suction piping must be sized to minimize flow resistance. Generally, suction piping should be sized to limit the flow velocity in the pipe to no more than six feet per second (FPS). If the suction line is to be longer than 100 feet, the line should be "oversized" by at least one pipe size. Suction piping should be routed as directly as possible and with minimum number of bends in order to minimize friction resistance. It is critical that a suction line never contains "loops" or "traps" that can trap air or sediment thus restricting flow through the piping.

Discharge Piping is the piping through which water passes from the pump to fountain nozzles, waterfall diverter fittings, and filter return fittings. Because discharge piping operates under pressure produced by the pump, discharge lines can operate at higher flow rates than suction lines. Discharge piping should be sized to limit the flow velocity in the pipe to no more than eight feet per second (FPS). If the discharge line is longer than 100 feet, the line should be "oversized" by at least one pipe size. Like suction piping, discharge piping should be routed as directly as possible with a minimum number of bends to minimize unnecessary resistance.

Drain Piping will generally depend on gravity to induce flow and therefore must slope downhill in the direction of flow. Drain lines should comply with local codes and should be fitted with the necessary clean outs and traps as required by those codes. Drain lines smaller than 2" are not recommended due to the potential for clogging. Many fountains will have multiple drain connections that will connect to a single larger waste line. Because the sizing of drain lines only effects the speed at which a fountain will drain, the size of drain piping is normally not critical. However, it is recommended that drain lines be of adequate size to drain the fountain within two to four hours. The actual rate of flow through a drain line will vary depending on the pitch of slope of the line and the depth of water in the pool. Following are nominal flow rates which can be used as a general guide for sizing:

2" Drain Pipe = 25 GPM	6" Drain Pipe = 300 GPM
3" Drain Pipe = 50 GPM	8" Drain Pipe = 600 GPM
4" Drain Pipe = 100 GPM	10" Drain Pipe = 1,000 GPM

Equalizer Piping is that which connects two or more fountain basins with the same water surface elevation. These lines are intended to avoid system flow imbalances between the connected basins by allowing water to flow between them. Since the only pressure to induce flow through these lines is created by the subtle differences in water level between the basins, equalizer lines must be relatively large and should be routed directly with no bends, loops, or traps. Equalizer piping should be sized to limit the flow velocity to no more than one foot per second (FPS). Care should be taken to avoid restricting flow at the ends of the equalizer lines and any grates used should have at least as much open area as the area of the equalizer line.

Piping Materials utilized in fountain systems can vary depending on the location within the system that they are used and their size. There are three locations within a fountain system which merit separate consideration. They are; (a) piping which is located within a basin or that penetrates the walls or floors of the fountain basin, (b) piping which is run underground between the basin and the equipment, and, (c) piping that is run through open structures within a building and in the equipment room.

Piping within a basin, or penetrating the walls or floor of a basin, should be brass, copper, or stainless steel. Plastic materials should never be used due to the deteriorating effects of sunlight on them and their inherent lack of strength. Steel and cast iron should never be used as they rust and may stain pool surfaces.

Underground piping between the fountain basin and the equipment room should be must be suited to the application as it is not easily accessed or replaced. Typically, Schedule 40 PVC is the minimum recommended for most installations. If PVC is not available or appropriate, stainless steel or plastic-lined steel piping are good alternates and copper or brass may be used for smaller pipe sizes. The exterior of buried steel piping should be protected from corrosion by a good quality coating such as epoxy or mastic.

Piping within buildings and equipment rooms should be non-corrosive wherever possible. National and most local fire codes now prohibit the use of PVC piping inside buildings due to the toxic gases which are released when PVC is burned. In buildings, piping 4" and smaller should be copper or brass and piping 4" and larger should be stainless steel or plastic-lined steel. It should be noted that most building codes will allow PVC piping to be used within an equipment room if the equipment room does not share the same air with a building containing people. The use of PVC piping in a direct-burial type or separate site-built equipment room is generally permitted but PVC piping within a basement, closet, or parking structure is generally not permitted.

STEP-7: Selecting and Sizing Pool Fittings

Pool fittings, like piping, are sized and selected based upon flow rates and function. There are two basic groups of pool fittings. These are; (a) pump suction and discharge fittings, and, (b) filter suction and discharge fittings. Following are the most frequently used fittings with a description of their function and flow ratings.

Suction and Discharge Fittings are used to prevent vortexing or turbulence. Fittings most frequently used are: (a) anti-vortex plates with sumps, (b) diverter pates with sumps, and, (c) suction grates with sumps. Fittings that are designed to function as either a suction or discharge device will be dual rated with a lower flow rate when used as a suction device and a higher rate when used for discharge.

Anti-Vortex Plates and Sumps are used to prevent a vortex or whirlpool (which could allow air to enter the pump) by drawing water into the sump through a narrow slot between the plate and the floor. These devices are typically designed for a maximum velocity through the slot of two feet per second (FPS) and are nominally rated for a 16" water depth. When used in shallower water depths, flow ratings should be decreased by 10% for each inch below the 16" standard. Anti-vortex plates and sumps are not recommended for depths below 8".

Diverter Plates and Sumps are used to control the discharge of water into a fountain basin. Typically they will be used to supply a waterfall, provide a means for filling the basin, or to return filtered water. They are designed to prevent the water entering through the discharge line from disturbing the pool's surface by creating undesirable turbulence. This condition is achieved by diverting the water horizontally through a slot between the plate and the pool floor. Diverter plates and sumps are typically designed for a maximum velocity through the slot of three feet per second (FPS) and are rated for a nominal 16" water depth. It is recommended that the flow rating be decreased by 10% for each inch that water depth is reduced below the 16" standard. Diverter plates are not recommended for depths below 8".

Following are nominal flow rates for standard plates and sumps. Values are reflected for each plate and sump size based upon its use as an anti-vortex or diverter device.

Anti-Vortex Plates & Sumps
R-80C (9" Sq.) = 60 GPM
R-83-4 (13" Sq.) = 200 GPM
R-84-8 (21" Sq.) = 600 GPM

Diverter Plates & Sumps
R-80C (9" Sq.) = 80 GPM
R-83-4 (13" Sq.) = 250 GPM
R-84-8 (21" Sq.) = 800 GPM

Filter Suction and Discharge Fittings are specialized fittings designed to assist in the circulation and cleaning of fountain waters. These are: (a) adjustable diverters, (b) stream eyeball inlets, (c) sweep eyeball inlets, and, (d) skimmers.

Adjustable Diverter Inlets are floor inlet fittings that are designed to provide integral flow adjustment points for filtered or recirculated water. Units are typically designed to provide a flow rate that can be varied from zero to the maximum flow rate of the pipe to which it is connected. Following are the maximum flow ratings for three common adjustable diverter inlets. Flow ratings should be decreased by 10% for each inch of water depth below a 16" standard. Diverter inlets are not recommended for depths below 8".

FAD-150 (1½") = 40 GPM	FAD-200 (2") = 80 GPM	FAD-300 (3") = 180 GPM

Stream and Sweep Eyeball Inlets utilize an adjustable orifice to provide for the directing of a filtered water stream towards skimmers or to areas that may require additional circulation. The Stream Eyeball creates a high velocity stream that can produce a circulation pattern that reaches some distance from the fitting. The Sweep Eyeball produces a flat sheet pattern and is often used to clear the floor and reduce sedimentation. Both units must be installed at least 6" below water surface when installed in walls. The sweep eyeball inlet is also suitable for floor mounting in at least 8 to 12 inches of water depth. Both units are rated for a minimum flow of 10 GPM and a maximum flow of 40 GPM.

Skimmers are designed to remove floating trash from a fountain basin by drawing surface water into the mouth of the skimmer and collecting debris in a removable internal basket. Skimmers mount in a wall at the water surface and connect to the filter pump suction line. Skimmers are available in many sizes but, in most fountain installations, only very small units are used for aesthetic reasons. Most small front access skimmers are rated for a minimum flow of 15 GPM and a maximum flow rate of about 40 GPM.

Pool Fitting Materials should be of all non-corrosive materials such as brass, copper, fiberglass or stainless steel. Fittings that will be visible should be specified with finishes that allow them to blend into the pool floor or wall. Most quality pool fittings utilize natural bronze or brass finishes which age naturally to a dark color. Pool fittings may also be painted or otherwise colored to match pool finishes while floor fittings can be fitted with title rims where desired.

STEP-8: Selecting and Sizing Overflow, Drain, and Water Fill Systems

A good fountain design needs to incorporate provision for the overflow of excess water, drainage of the basins, and for filling of the basins.

An Overflow System may be as simple as an open-ended standpipe or a wall opening that drains to waste. In either case the elevation of the opening is set at the highest elevation which water is desired to reach. The overflow fittings and the waste line to which they connect should be adequate to handle a flow rate equal to a maximum 4" per hour rainfall rate collected over the total pool surface. To convert this flow rate into gallons per minute (GPM), multiply the combined surface area of all pools by .04. Then use the calculated GPM flow rate to select the appropriate size overflow drain fitting. If more capacity is required than can be provided by a single fitting, use multiple fittings.

Standpipe Overflows
FSD-200 (2") = 15 GPM
FSD-300 (3") = 36 GPM

Wall Overflows
FWD-200 (2") = 8 GPM
FWD-300 (3") = 18 GPM

Drain Systems: every pool in a fountain system should have provision for drainage. This provision will most often take the form of a floor drain fitting that may connect directly to a waste line or, in small pools and pools that are difficult to access, a pool to pool drain-down system can be utilized. A drain-down system can simplify piping and eliminate the need to access a floor plug in an upper pool that is difficult to reach. In such cases, an open strainer covered floor drain can be installed in the upper pool and piped to a drain fitting with a plug in a lower pool. By removing the plug in the lower basin, the upper pool will drain to the lower basin. Care should be taken to ensure that the lower pool drain or overflow is adequate to flow from the upper pool or the lower pool could be flooded.

Pools floor should be designed to slope towards floor drains with a minimum 1% slope. An adequate number of floor drains should be utilized to completely drain all areas of the pool. In a single very large basin, while only one drain plug may need to be removed to drain the majority of the water, other floor drains may need to be located over the floor of the pool so that all low areas can be drained completely.

Water will flow through a floor drain much faster than it will flow through an overflow fitting because of the head pressure created by the water covering the floor drain. As water drains from the fountain and the depth of water over the open floor drain decreases, the flow rate will also decrease. The flow rates through these open drains as the pools near empty will be very near the same rate as that of the drain pipes as listed under STEP-6.

In some rare circumstances a fountain basin's floor may be located at an elevation too low to allow gravity drainage to the appropriate waste line. In that case it is recommended that a sump be formed into the basin floor to which the floor should slope as with a drain fitting. This will allow for the use of a submersible sump pump – either temporary or permanently installed to be used for drainage. **Two notes of caution:** 1. Check local codes before incorporating a sump pump drainage system. 2. Provide a Class-A GFCI protected circuit for the sump pump power.

Water Level Fill Systems

Every fountain should be provided with some means for filling it with water. While a garden hose may be the appropriate choice for a very small fountain, some type of automatic system that does not require constant surveillance is usually a better choice. There are two basic types of automatic fill systems - mechanical and electronic. The mechanical system uses a float to operate a mechanical valve on a water supply line. Electronic fill systems are more complex and will typically include; (a) a water level sensor, which will be mounted in the lowest pool basin, (b) an electrically actuated fill valve, which is generally a solenoid type valve like those used in irrigation systems and, (c) a control unit, which interprets the water level sensor's signal and activates the fill valve. Both the float and electrically operated fill valves only need to be sized to deal with water "make-up", the volume water required to make up that water lost to evaporation and splash. It is recommended that a larger manual valve be provided to fill the fountain more quickly after it has been drained for maintenance. Both manual and automatic fill valves should be sized separately using the following procedure:

1. Estimate the evaporation rate of the fountain. To calculate the evaporation rate of a fountain you must know the air temperature, relative humidity, and wind speed of the fountain's environment. You must also know the approximate square feet of water surface area of the fountain. To determine the evaporation for your fountain in GPM, use the evaporation rate chart below and follow three simple steps. (Note: Realistically you will only be able to make "educated guesses" at these variables. It is suggested that you estimate the worst possible condition that the fountain will see for any length of time.)

90 Deg. F at 20% Humidity with 10 MPH Wind = .00060/100 Sq. Ft. of Water Area
80 Deg. F at 20% Humidity with 10 MPH Wind = .00052/100 Sq. Ft. of Water Area
70 Deg. F at 20% Humidity with 10 MPH Wind = .00043/100 Sq. Ft. of Water Area
90 Deg. F at 50% Humidity with 10 MPH Wind = .00032/100 Sq. Ft. of Water Area
80 Deg. F at 50% Humidity with 10 MPH Wind = .00028/100 Sq. Ft. of Water Area
70 Deg. F at 50% Humidity with 10 MPH Wind = .00025/100 Sq. Ft. of Water Area

Sizing Steps:

A. Select the evaporation rate from the chart based on anticipated conditions.
B. Take the total water surface area in square feet and divide it by 100.
C. Multiply the evaporation rate you selected in A. by the area you calculated in B.

The above evaporation rates are based on still water with the fountain not operating. While it is impossible to calculate the evaporation rate of water spraying through the air, typically you can estimate the evaporation rate of an operating fountain at double that of a non-operating fountain. Therefore, take the GPM rate you have calculated and multiply by 2 to determine the operating evaporation rate.

2. Select an automatic water make-up valve based on the GPM flow rate calculated in Step-1, above. It is recommended that the valve be sized to maintain 24 hours of evaporation loss with 4 hours of operation. This will effectively "oversize" the valve and insure there is adequate capacity during severe weather conditions and will also prevent the valve from cycling too frequently. Use the valve flow rates below to select the appropriate make-up valve size. Flow rates assume a city water pressure of 50 PSI.

3/4" Valve = 12 GPM
1-1/2" Valve = 80 GPM

1" Valve = 25 GPM
2" Valve = 150 GPM

3. Sizing the Manual Fill Valve requires only that you calculate the total volume in gallons of water which will be required to fill all of the fountain basins and then divide by 4 hours. The easiest way to calculate the volume of the pools is to determine the total cubic feet of water in the pools and then multiply the cubic feet by 7.48.

CHAPTER THREE:

DESIGNING WITH WATERFALLS

A Waterfall "happens" when a volume of water flows over a "weir". In fountain terminology, a weir is the surface or edge over which water flows by force of gravity to create a waterfall. Weirs may take many sizes and shapes. The key in creating a specific waterfall effect is in understanding how the basic shape and size of the weir controls the shape, texture, and the level of aeration in the waterfall. In any waterfall design, the weir should be as level as possible. If there are high and low points, dry spots may result at the high points along the weir. Unfortunately a perfectly level weir is rare in the real world of the construction jobsite. It is, therefore, important to consider how level a desired weir material can reasonably be constructed, and then to design for a depth of flow that will be sufficient to compensate for the expected irregularities. When designing a waterfall effect it is generally recommended that a minimum of 1/2" depth of water flow over the weir be maintained.

Aerated Waterfalls are characterized by their "white water" effect. One common method for creating an aerated waterfall is to use a series of stair-steps. This method requires a minimum of three steps to induce full aeration. The stair-step design induces aeration by causing the water to roll or "tumble" down the steps. To create the tumbling action the steps must be correctly sloped and sized for the flow depth. The use of a 1:1 slope with 3" steps and 1/2" to 3/4" flow depth is considered optimum in creating maximum aeration. In addition, it is important that the first or top step be half the height and width of the second and third steps. This slows the velocity of the water enough as it starts down the steps to allow it to tumble. If this first step is too wide, the water will accelerate as it crosses the step, causing it to miss the second and third steps. If for structural reasons the top step must be wider than 1-1/2" to 2", then the step should be sloped down in the direction of the source trough at a minimum 15 degrees to increase the depth of water on the step and to minimize velocity. Figure-4 illustrates three different aerated waterfall weir configurations.

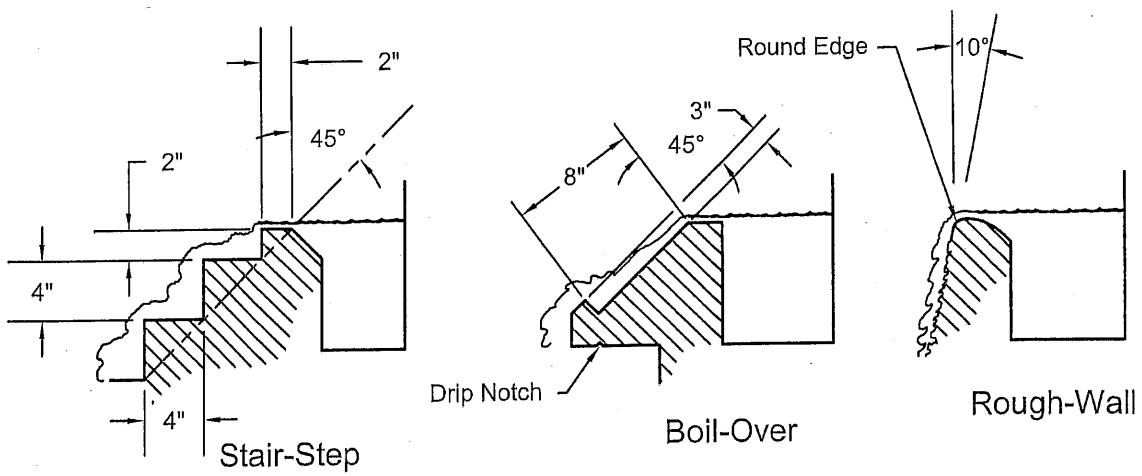

Figure-4. Typical Aerated Waterfall Weirs

The "boil-over" technique is best suited to applications where water is going to fall a significant distance and a broken, pulsating, "natural" waterfall appearance is desired. Aeration is created by first accelerating water down a short ramp. At the base of the ramp the accelerated water

crashes into a small trough of water creating turbulence and a rolling boiling action. The water then surges over the weir edge creating a highly aerated pulsating waterfall.

The "rough-wall" technique utilizes a sloped wall with a rough face. As water slides down the wall it begins to tumble and roll but, because the wall is sloped, continues to interact with the wall creating significant aeration.

Clear Sheet Waterfalls may be created by a variety of different weir configurations ranging from a simple flat edge at the top of a wall to an attached metal weir edge. The water depth over the weir necessary to produce a sheet flow will depend on the height of the waterfall (the distance that it drops from the weir to the lower pool water surface), the type of weir, and the prevailing wind conditions. As a sheet of water falls it becomes thinner. Therefore, the greater the height (drop) the more water flow will be required for the sheet to maintain its integrity (i.e., not break-up) until it impacts the water surface of the pool into which it is falling. Wind tends to lift and tear a clear sheet waterfall destroying the sheet effect and frequently creating splash problems. The thicker a sheet waterfall is, the more wind resistant it will be.

The weir configuration is the most important determinant of a waterfall's flow requirements. An inefficient weir design can easily require twice the flow rate as an efficient design to achieve the same effect. Water has a natural cohesive property and it attempts to stick to the surface over which it flows. The sharper the turn when the water reaches the edge, the easier it is for the water to break cleanly from the structure and form a clear sheet. Metal weirs that can attach to the vertical face of the structure are the most efficient and may produce a sheet flow with as little as 1/4" of water depth over the weir. The relatively sharp edge of the metal weir makes it impossible for the water to turn under or "wick" at the weir edge and ensures a clean break.

The following chart shows nominal water depths necessary to produce a smooth sheet waterfall. These depths are recommended minimums based on the height of the waterfall with no wind factor. In low wind conditions use one step higher on the chart, and in moderate to high wind conditions, two steps higher.

Depth (D)	GPM/FT	Height of Drop
1/2"	16	1' to 2'
5/8"	20	2' to 4'
3/4"	24	4' to 6'
1"	40	6' to 8'
1-1/4"	52	8' to 10'
1-1/2"	66	10' to 15'
2"	102	15' to 20'
3"	187	20' to 30'

Sheet type waterfalls can be produced in a variety of textures and degrees of clarity. The weir or edge over which the water falls determines the nature of the sheet. Three weir designs that provide control over where the sheet falls are the Drop Sheet, Clear Sheet and the Accelerated Sheet. Figure-5, on the following page illustrates these three basic sheet type weirs.

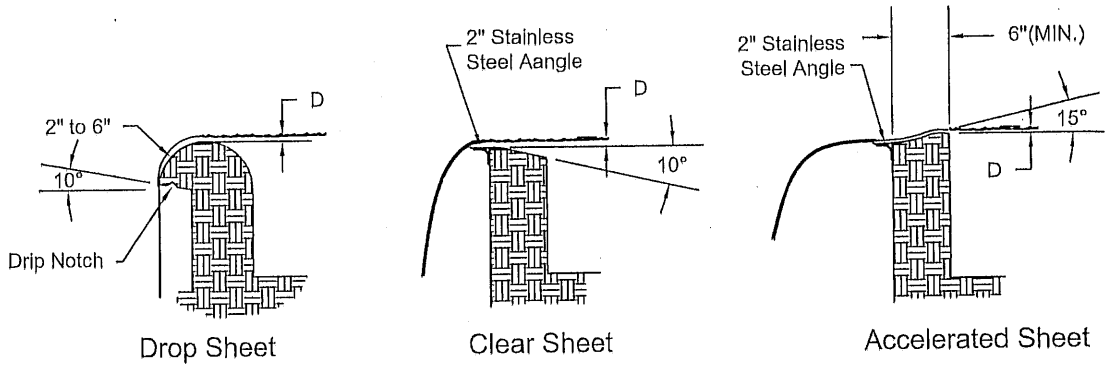

Figure-5. Typical Clear Sheet Waterfall Weirs

The **Drop Sheet** weir configuration should be utilized when the width of the lower pool is limited or the design objective is to drop the sheet straight down. The radius of the structure and the angle of the final weir surface is critical to ensure a good quality sheet which does not bend back under the structure. A drip notch should be utilized whenever a metal edge is not used.

The **Clear Sheet** weir is the most common of sheet weirs and produces the clearest waterfall possible. A metal edge weir is strongly recommended with weir configuration if the sheet thickness desired is less than 1/2". If nozzles are used in the upper pool a wave baffle is also recommended as waves will greatly reduce the consistency and clarity of the sheet.

The **Accelerated Sheet** weir produces a textured clear sheet of water that projects into a lower pool. This configuration operates somewhat like a ski-jump with water accelerating down a sloped area and then jumping into the air. Because of the acceleration effect, this weir type works well even with some wave action in the upper pool.

CHAPTER FOUR:

DESIGNING WITH WIND CONTROL SYSTEMS

Wind control systems are used to reduce the height of vertical water effects or to turn off fountain pumps in order to prevent excessive splash during high wind conditions. These systems are available in both single and two-stage versions. A single stage system may be used to either turn off a pump or to reduce the height of a water effect to make it less susceptible to the wind. A two-stage control can be used to first reduce an effect at a pre-determined wind speed, and then to turn if off at a second pre-set (higher) wind speed.

A wind control system typically consists of two devices. These include the wind control unit and either a control valve or an interface device to turn off the fountain pump. It is important to note that the control unit is only capable of sending an electrical signal. In order to effect a change in the system requires additional equipment such as a control valve or relay.

Control Valves & Pump Arrangements

The three most frequently used methods for controlling water effects using a wind control unit are; (a) the throttling valve method, (b) the dump valve method and, (c) the dual pump method. Figure-6 below illustrates these three basic methods for wind control.

The Throttling Valve Method utilizes an electrically actuated valve on the discharge line which connects to the water effect to be lowered during high winds. The valve must be of such a type that it will allow two separately adjustable flow rates that can be switched by means of an electrical signal. When the wind speed increases above an adjustable pre-set point on the wind control panel, a signal is sent to the valve which causes it to partially close thereby decreasing the flow rate and reducing the height of the water effect.

The Dump Valve Method utilizes an electrically actuated valve that connects the discharge piping to either the suction piping or a diverter connection within the fountain. When the high wind speed signal is received, the valve is opened and dumps water to the suction piping, or to a diverter, thereby reducing the flow to the nozzle and lowering its height. This arrangement is ideal when the nozzle to be reduced also contributes to a waterfall's flow. By routing the dump line to a diverter in the water fall source pool, when the nozzle height is reduced, the waterfall will still be supplied via the dump line.

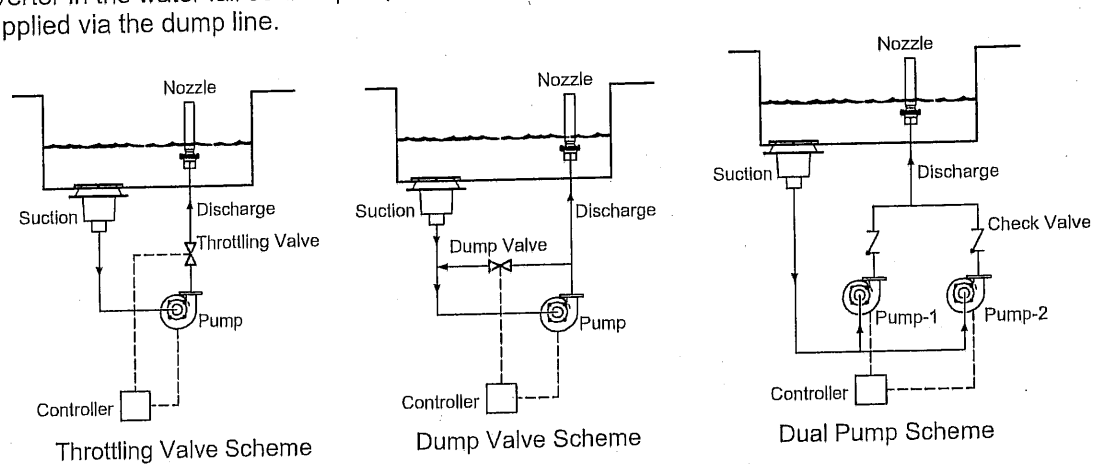

Figure-6. Typical Wind Control Methods

The Dual Pump Method utilizes two pumps that operate in parallel. When wind speed increases, one of the pumps is turned off, reducing the height of the water effect. If the wind speed continues to increase, the second pump may also be turned off, eliminating the water effect completely. This arrangement provides an energy conservation benefit in that, during high wind conditions, the power consumed by the fountain is reduced due to one or both pumps being turned off.

CHAPTER FIVE:

SEQUENCING WATER EFFECTS AND LIGHTING

In recent years there has been a resurgence of interest in sequencing fountains. That is, fountains that can change the appearance of the water or lighting effects.

The sequencing of effects requires two basic components - a **Sequencing Controller** and a **Field Device** that turns the effect on and off. The field device is typically a valve (for water effects) or a relay (for lighting).

Sequencing Controllers have a permanent memory that records a computer programmed set of consecutive ON and OFF commands that are played back through outputs to the **Field Device.** The controller is typically triggered by an external command such as a button, a time clock, or a photocell. When the sequence is complete, the controller can be programmed to repeat the sequence or to stop. Sequencing Controllers vary widely in cost, capability, and complexity. Sequences are limited only by the imagination and, of course, the project budget.

The most important choice in the planning of a sequenced fountain is the selection of the Field Devices to be used. While the sequencing of lighting can be instantaneous, the sequencing of water effects cannot. Water has mass and, unlike electricity, cannot respond instantly to a command from the sequencer. When the sequencing controller sends a signal to a valve, the valve must open and allow the water to accelerate through the pipe and nozzle. The time required for all of this to happen depends upon three factors: speed of the valve, the volume of water, and the driving pressure. For example, if the valve is located close to the nozzle, the water effect will react faster (ON and OFF) than if the valve is located further away. If the effect is small (less water volume) the water can be started and stopped more quickly than if it is a large effect.

Sequencing Valves

There are two primary ways to operate valves; electricity and fluid (air or water). Each has advantages and limitations.

Electric Valves

There are two primary types of electrically operated valves used in fountain design; solenoid and motorized. Solenoid valves larger than 3/8" are typically diaphragm operated and rely on water pressure to open and close the valve. This makes them fairly slow (1/2 - 2sec) opening, but they are relatively inexpensive up to 2". Motorized valves are very slow to open (15 - 30sec) but have the advantage of allowing controlled throttling and availability in sizes larger than 3".

Fluid Valves

Fluid operated valves are also available in two types; air and water operated. Small (¼" to 2") air operated valves are very fast (0.05 -0.2sec) and are comparable in price to solenoid valves of the same size. When larger valve sizes are required, a pneumatically operated butterfly valve can be used. These are fast acting (.5-2sec) and range in size from 1" to 12". They cost slightly less than the motorized actuated valves of the same size, and have the capability to throttle both the opening and closing speed.

Water operated valves are fast (.5 -1sec), but are 50-75% more expensive than either motorized valves or pneumatically activated butterfly valves. They are also not available in sizes smaller than 2".

Valve Design Recommendations

In a vault or equipment space where ON/OFF effect speed is not a consideration use 120vac controlled valves.
In a vault or equipment space where ON/OFF effect speed is more of a consideration use pneumatically activated valves.
In a basin environment where ON/OFF effect speed is very important use air operated effect valves.

Sequencing Lighting

Lighting can be sequenced by switching the fixtures ON and OFF or by using a dimmer. As mentioned earlier, lights turn can turn on instantaneously, whereas water effects cannot. The lighting can be turned ON and OFF using the same output signal from the Sequence Controller. However, if the light is turned OFF while water is still falling, much of the effect will be lost. Therefore, separate outputs should be used for lighting if the effects are to be coordinated.

Dimmers allow lighting to be turned ON and OFF gradually. The equipment and the interface to the water effects Controller, however, makes it expensive and complex.

There are two common voltages for lighting (120vac and 12vac). The National Electric Code requires that any device using voltage over 15VAC, and within 5 ft of a fountain basin, must have a GFCI protected circuit. The distance from the breaker to the lights determines the number of lights that can be run from a single breaker. This distance is approximately 240 ft of accumulative wire length and there is a practical limit to the number of connections (5-6). There are many style and wattage choices in 120vac lighting and the voltage drop from the breaker to the light is normally minimal.

The use of 12vac lights requires a transformer that is approved for fountain use. The voltage drop for 12vac is much higher than for 120vac. Where a 12-gage wire might be used for a 120vac light 100ft from the breaker, a 6gage wire would be required to run the same distance with 12vac.

Switching lights ON and OFF can be done with relays, regardless of the voltage. Relays have a limited number of switching life cycles (1-5million) before they must be replaced. Solid state switching devices (SSR's) can only be used with 120vac but have a much longer switching life (100 million cycles). All these numbers seem huge, until you calculate the number of cycles in an active fountain.

Lighting Design Conclusions

It is possible to synchronize a changing water pattern with instantaneous changes in lighting, but the response time of the water effect must be taken into consideration to coordinate the events.

Maintenance

The components used in a sequencing fountain require more frequent maintenance and replacement than those of standard fountains. This is because standard fountains do not have any moving parts (other than the pump). The designer and installer must take maintainability into account when creating the fountain. For example, if the sequence valve is to be mounted beneath a concrete deck, sufficient room must be made below the deck or top accessibility for maintenance personnel.

Motor Control

Water Effects can also be controlled by turning the pump ON and OFF or by varying the speed of the pump with a Variable Frequency Drive (VFD). The sequencing of pumps is not recommended unless the length of the sequence is very long, i.e., at least 10-minute cycles. Rapid pump sequencing will overheat and damage the motor.

A variable frequency drive (VFD) allows the flow and pressure to the water effects to be varied. If used in conjunction with sequencing valves, VFD's can be used for pressure control of the water system.

Pressure Control

Regardless of the type of control valves used, when multiple water effects are sequenced, some form of pressure maintaining valve should be used. This valve maintains a constant pressure to the control valves (maintaining a uniform effect height) and prevents the system from being over-pressured. In most cases a "pressure sustaining" valve should be used which connects the discharge header to either pump suction line or a diverter fitting in the pool basin. Figure-7 below illustrates a simple sequencing system.

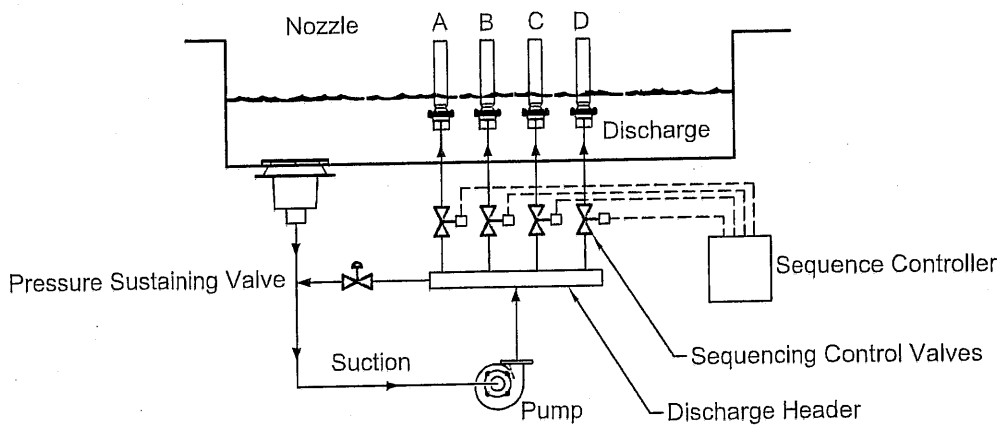

Figure-7. Typical Sequencing System

CHAPTER SIX:

FOUNTAIN LIGHTING

The lighting of a parking lot, a highway, or an office environment is a science. Foot-candle values – initial and maintained – are easy to predict. The lighting of water effects is more of an 'art', based upon empirical experience.

Water effects are most effectively illuminated from directly below or directly above. Lighting from above may be accomplished with a number of fixture types depending on the installation. Indoor fountains may be illuminated from above by recessed down-lights, track lights, other interior spots or floods, or even skylights. Outdoor fountains may be illuminated from above using exterior fixtures mounted on buildings, trees, or poles. Underwater fountain lights are the best method for lighting water effects from below.

Underwater fountain lights are available in two basic configurations - freestanding fixtures and wet niche fixtures. Freestanding fixtures offer the most versatility in positioning and adjustment but are more obtrusive in that they literally stand on the pool floor in plain sight. Niche mounted fixtures are designed to be mounted into a forming shell that is cast into the floor or wall of a fountain basin.

The National Electrical Code (NEC) and Underwriter's Laboratories (UL) allow only incandescent light sources in underwater lighting fixtures. High intensity discharge (HID) light sources are prohibited primarily due to the high voltages required to "strike" these lamps. In spite of this apparent limitation, a wide range of incandescent lamps is available, in both 120 and 12 volts, ranging from 20 to 1,000 watts. (See Chapter Seven, Electrical Safety and the NEC)

Lighting Vertical Nozzles

There are three variables to consider when lighting a vertical effect from underwater. These are: (a) the operating height of the effect, (b) the type of effect and, (c) the distance which the fixture is located below the water level. The following chart may be used as a guideline to determine lighting requirements for most vertical water effects.

Wattage (lumen output) will vary with the operating height of the water effect and the distance between the fixture and the water surface as noted on the chart. If water above the fixture is deeper than 12", use the standards for the next higher spray height.

Spray Height	Qty	Wattage
0' to 3'	1	250
3' to 10'	2	250
10' to 20'	3	250
20' to 30'	3	500
30' to 50'	6	500
Above 50'	12	500

Clear sheet effects such as Morning Glory Nozzles and Crystal Dome nozzles require special consideration. For these effects if is recommended that three fixtures be used for effects up to 4' in diameter and a minimum of six fixtures be used for effects greater than 4' in diameter. The increased number of fixtures will allow for better uniformity and light distribution.

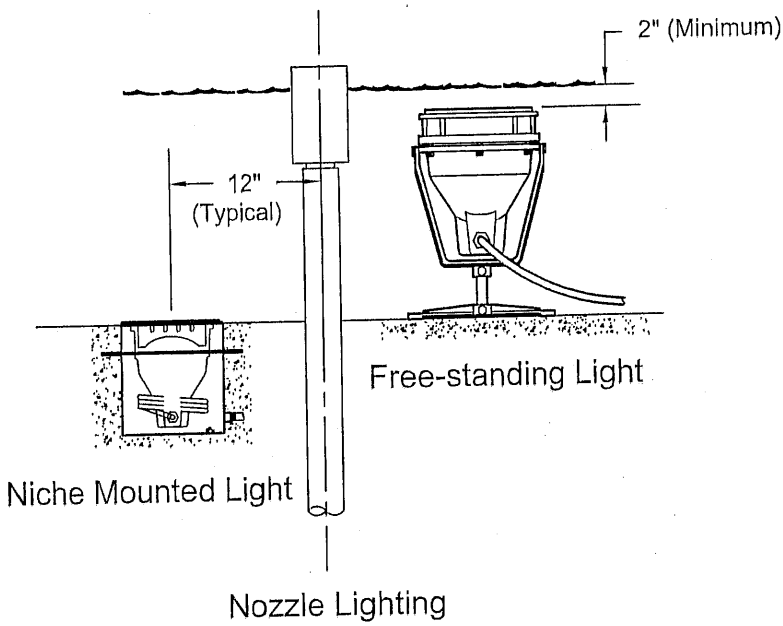

Figure-8. Vertical Nozzle Lighting Parameters

Waterfall Lighting

There are two basic rules of thumb that apply to the illumination of waterfalls with underwater lighting fixtures. First, fixture spacing should not exceed a distance equal to the height of the waterfall. Second, fixtures should be placed directly below the point that the waterfall impacts the lower pool. It should be noted that it may be difficult to determine the exact point at which a waterfall strikes the surface of the lower pool because minor changes in weir shape and even variation in flow rate can change the point that the water strikes the pool below. If position is questionable, place the fixtures slightly closer to the wall.

Any underwater fixtures used to light a heavy waterfall should be either niche mounted or anchored to the floor. If a waterfall is unusually high or massive, fixtures may need to be mounted deeper in the water or provided with a "shield" to protect their lamps (bulbs) from shock damage.

Another sound practice is to specify a fixture that is UL Listed for use with multiple wattage lamps. This will allow for changes in lighting level after installation.

Note: All underwater fixtures must be protected from overheating.
(See Chapter Seven, Electrical Safety and the NEC)

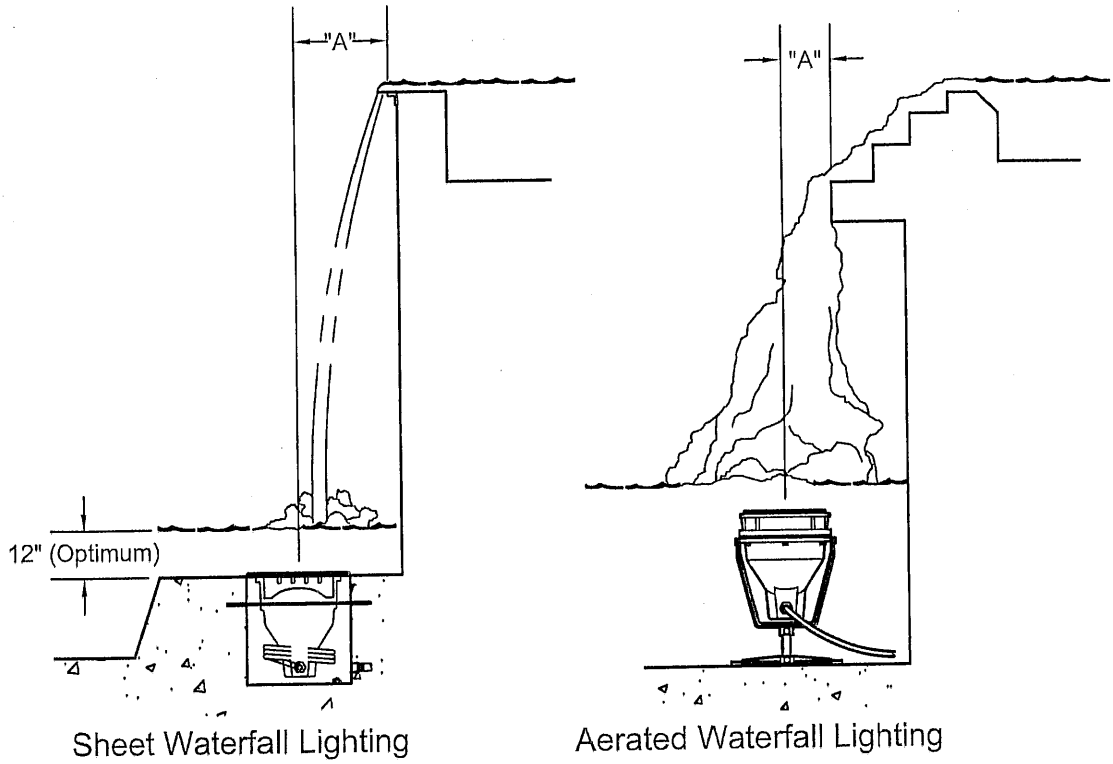

Figure-9. Waterfall Lighting Parameters

Height	"A"	Spacing	Wattage
1'	6"	2'	100
2'	8"	3'	150
4'	10"	4'	250
6'	12"	5'	250
8'	15"	6'	250
10'	18"	6'	500
15'	24"	8'	500
20'	24"	8'	500

CHAPTER SEVEN:

ELECTRICAL SAFETY AND THE NEC

In the interest of safety, it is important that any person involved in designing or installing underwater electrical equipment be familiar with Article 680 of the National Electrical Code (NEC). This article deals with standards for underwater lighting and other equipment used in swimming pools and decorative fountains. Following is a brief outline of some of the important requirements of this article. It is recommended that you consult the NEC for more detailed information.

Underwater Fountain Lights must be protected from overheating by either an internal thermal cut-off device (TCO) or a low water cut-off system. Fixtures must be mounted below water level and, if pointed up, must be protected by a rock guard. All underwater lighting circuits must be protected by a Class-A ground fault circuit interrupter (GFCI) or must operate at 15 volts or less. (New York City Code requires all lights to be 12 volt.) Exposed submersible cord may not exceed 10 feet and, in the case of niche mounted fixtures, cord length stored in the niche must be of adequate length to remove the fixture from the water for relamping without lowering the pool water level.

Underwater Junction Boxes must be supported by either rigid brass or copper conduit, cast directly into concrete, or supported and anchored securely to the pool floor with non-corrosive supports. After wiring, all cord entries must be secured with strain-relief cord compression seals and all boxes must be potted.

Submersible Pumps must be protected by an integral, thermal cut-off device or a low water cut-off system. Pumps may not have more than 10 feet of exposed cord and may not operate at more than 300 volts. Like underwater light fixtures, submersible pumps must be protected by a Class-A ground fault circuit interrupter (GFCI). Equipment-type ground fault devices, commonly used on large submersible motors in industrial applications, are not rated "Class-A" and are not suitable for protecting people. In addition, most manufacturers of submersible waste water and sump pumps do not recommend their pumps to be used in fountain installations. The only submersible pumps that are UL Listed for fountain use are available in 115 and 230 volt, single-phase power and are limited to one horsepower.

UL Listing of Equipment

It is strongly recommended that only UL Listed electrical products be used in your fountain designs. Be aware that not all products offered on the market carry the UL Listing.

CHAPTER EIGHT:

WATER TREATMENT IN FOUNTAINS

Decorative fountain systems are similar to swimming pools in regard to their water maintenance requirements. However, since people do not normally swim in fountains, the required standards for water treatment are not as rigid as those for swimming pools or interactive fountains. Generally, fountain water maintenance will be limited to maintaining a pH balance and providing some means for controlling algae and bacteria.

PH Control can be accomplished by either installing an electronic pH measuring and controlling device in conjunction with a chemical feed pump, or by using a simple DPD test kit and adjusting manually. DPD test kits are available at your local swimming pool supply store.

Acceptable pH range:	7.2-7.8
Optimal pH range:	7.4-7.6

Algae & Bacteria Control can best be accomplished using a device that continuously sanitizes the water. These include chlorinators, brominators, ozone generators, and silver/copper ion systems. On smaller fountains or when there is no safe location for a chemical feed system, chemicals and algaecides can be added manually. Whether using erosion type feeders or treating manually, regular testing of fountain water is required using A DPD test kit for pH levels and chemical concentrations. These tests should be performed after chemicals have been added and circulated for one hour.

Water Treatment in Interactive Features

Interactive water features require a much greater degree of attention to water quality because of human contact. Because the water within a reservoir may have a relatively low volume, it may be potentially subject to sudden contamination.

Equipment

Chlorine & Bromine Feeders can be either a simple erosion canister, through which filtered water passes in route to the fountain, or a sophisticated electronically controlled system interfaced with chemical feed pumps. Care should be taken to not locate any type of chemical feed system or chemical container in a confined equipment space, and never place a chemical feeder in a location that is poorly ventilated. It should not share a confined space with electronic controls due to the potential for their corrosion.

Ozone Generators produce ozone gas and then inject the ozone into the filter discharge line. Ozone, like chlorine and bromine, is an oxidizer and kills bacteria and algae upon contact. Care should be taken to only use a sealed type ozone generator that utilizes an air compressor to inject the ozone. These units are the most efficient and may release less ozone to the air. Unlike chlorine or bromine, ozone exists only for a short time after being generated. Instead of sanitizing the main body of water in the pool, ozone sanitizes the water in the filter discharge line as it circulates. Because of this it is important to note that the use of ozone will not completely eliminate the use of chemicals and that some chlorine or bromine will have to be added to maintain a minimum level or to "shock" resistant algae. Ozone does not effect the water pH balance and can reduce the amount of chemical sanitizer needed, thereby reducing costs for buying those chemicals. Care should be taken to not locate an ozone system in a confined equipment space that is poorly ventilated. It should not share a confined space with electronic controls due to the potential for their corrosion.

Automated Water Treatment Systems

An automated water treatment system consists of sensing devices that provide signals to a controller that maintains proper pH and ORP (Oxidizing Reduction Potential) levels. If these readings are too low or too high, the controller activates a solenoid valve or feed pump at a chemical treatment station to add a measured amount of chemical. (There would typically be two separate chemical treatment stations, one for liquid acid and one for chlorine.) The ORP measurement relates to proper chlorine or bromine levels. That reading should be regularly compared to the Free Chlorine level that is read with a DPD test kit.

Proper Readings	
Free Bromine Level:	2.0-5.0 ppm
Free Chlorine Level:	1.5-3.0 ppm
Minimum ORP:	650mv

Silver/Copper Ion Systems

These systems impart very small concentrations of silver ions and copper ions into the water either by erosion (replaceable cartridge type) or by electrolytic action (replaceable electrodes) depending upon the type of system. The presence of silver ions inhibits bacterial growth. Chlorine or bromine will have to be added to maintain a minimum required level or to "shock" resistant algae. Silver and copper ion systems can reduce the consumption of those chemicals by partly accomplishing their purpose.

"Magnetic" Water Treatment has been studied by several academic institutions including Purdue University's School of Engineering and has been found to be totally ineffective. In the words of one seasoned designer, "it's snake oil!".

APPENDIX-A:

DESIGN CHECK LIST

Following is a checklist of important elements that should be considered in the design of a fountain system.

- ❑ Check the visual height and normal splash parameters of the visual effects selected and verify that the basins are large enough to contain splash.

- ❑ Verify that pool water depths and freeboards are adequate. In waterfall fountains, make sure that freeboards consider both the operating and off water levels.

- ❑ If water level "dependent" type nozzles have been selected, verify that:

  - ✓ Water levels will be constant enough for their use.
  - ✓ That they are not going to disturb a waterfall or add a wave dampener.
  - ✓ Verify that the nozzle is not in the center of a symmetrically shaped pool or add a wave baffle.

- ❑ Verify that a recirculating pump will be located within 100 feet of the fountain and will be at an elevation below the lowest water level in the fountain. If not, review Chapter Two, Step-4.

- ❑ Verify that anticipated wind speeds will not create a splash problem and, if there is doubt, incorporate a wind control system into the design.

- ❑ Verify that the suction and discharge fittings and piping are of adequate quantity and size. Make sure that diverter fittings have been located in center areas of pools and troughs and are not located close to pool walls. This could cause turbulence.

- ❑ Verify that adequate filter fittings have been installed to provide good circulation and that all skimmers have been located in the lowest pool, if this is a waterfall installation.

- ❑ Verify that provisions have been made to drain every basin.

- ❑ Verify that overflows are of adequate size and are located in the lowest pool, if this is a waterfall installation.

- ❑ Verify that an adequately sized water fill line has been provided and that the fill line connects to the highest pool or to discharge piping which connects to the highest pool, if this is a waterfall installation.

- ❑ Verify that all piping that connects to upper pools contains a check valve (one direction valve), if this is a waterfall installation.

- ❑ Verify that adequate quantity, wattage and spacing has been used for lighting fixtures, if lighting has been used.

APPENDIX-B:

GLOSSARY
(TERMS OF THE TRADE)

Fountain Systems:

Freeboard is the distance between the water level and the top of the fountain pool wall that contains the water.

Static Water Level is the water surface elevation with pumps turned "off".

Operating Water Level is the water surface elevation when pumps are "on" and water is flowing through the system.

Shut-Down-Rise is the difference between the elevation of the water level with the pump "off" (static) and the pump "on" operating.

Equalizer is an open pipe which connects between two pools of "equal" water surface elevation and is intended to "equalize" water surface imbalances between the basins and maintain equal surface levels.

Catch Basin is the lowest pool in a waterfall installation or a tank in which water collects.

Water Level Control is a system that is designed to automatically maintain a constant water level in a fountain basin.

Wind Control is a system designed to either turn "off" a pump or reduce the operating height of a water effect when the wind speed increases to the point which it causes water to be blown from the basin.

Low Water Cut-Off is a system that turns "off" fountain pumps and lighting if the water level in the basin drops to an unsafe level for the equipment to operate.

Thermal Cut-Off Device is a device that turns a pump or light fixture off to prevent it from overheating.

Self-Priming is a pump type which is capable of "priming" itself by drawing water up through a pipe connected to a fountain basin located at a lower elevation.

Flooded Suction is a pump type which depends on being "flooded" for proper operation and therefore must be located at an elevation which is below the water surface of the fountain basin to which it connects.

Motorized Filter is a filter system that utilizes a dedicated filter pump.

Parasite Filter is a filter system which "parasites" off of the main visual effect recirculating pump and does not have its own dedicated filter pump.

Underwater Lighting:

Wet Niche Light is a light fixture that is mounted in a forming shell or "niche" that is cast into the pool floor or wall.

Freestanding Light is a light fixture that is portable and is mounted on a pedestal or stand so that it sits atop the pool floor.

Conduit Mounted Junction Box is a junction box that mounts on a conduit and is used in conjunction with freestanding lights.

Flush Mounted Junction Box is a junction box that is flush cast into the pool floor and is used in conjunction with wet niche lights.

Useful Fountain Design Formulae:

One (1) Gallon of Water = 8.34 Lb.

One (1) Cubic Foot of Water = 62.41 Lb.

One (1) Cubic Foot of Water = 7.48 Gallons

One (1) PSI (Pounds per Square Inch) = 2.31 Feet of Head

One (1) Inch of Hg (Mercury) Vacuum = .49 PSI or 1.13 Feet of Head

One (1) Horsepower = .746 Kilowatts divided by Efficiency of Motor.

APPENDIX-C:

PIPING SIZING CHARTS

Select the appropriate pipe size (for Schedule 40 PVC) from the chart based on the required design flow rate.

Pipe Size	Flow in GPM - Suction	Flow in GPM - Discharge
1/2"	6	8
3/4"	10	13
1"	16	22
1-1/4"	28	37
2"	38	51
2-1/2"	63	84
3"	90	119
4"	138	184
5"	238	317
6"	540	720
8"	936	1247
10"	1475	1966
12"	2093	2791
14"	2400	3800
16"	3800	5000
20"	6000	8000
24"	8800	11000
30"	13700	17900

APPENDIX-D:

WATER FEATURE REFERENCE SOURCES

BOOKS

I. FOUNTAINS

Aurand, Douglas C., ***Fountains and Pools***, Copyright 1986, PDA Publishers Corp., 1725 E. Fountain, Mesa, AZ 85203

Campbell, Craig S., ***Water in Landscape Architecture***, Copyright 1978, Van Nostrand Reinhold Co., New York, NY

Harris, Charles W., and Dines, Nicholas T., ***Time-saver Standards for Landscape Architecture, 2nd Edition***, Copyright 1998, McGraw-Hill, Inc., New York, NY

Images, ***Water Spaces of the World, Vol. 1***, Copyright 1997, The Images Publishing Group, Oty, Ltd., Mulgrave, Vic. 3170, Australia

McCulley, E.G., **"Water Pools and Fountains"**, ***Handbook of Landscape Architectural Construction***, Edited by Jot Carpenter. McLean, VA: Landscape Architecture Foundation, 1973.

Moore, Charles, ***Water and Architecture,*** Copyright 1994, Henry N. Abrams, Inc., 100 Fifth Avenue, New York, NY 10011

Morton, H.V., ***The Fountains of Rome***, Copyright 1966, The MacMillan Company, New York

Piland, Sherry and Uguccioni, Ellen J., ***Fountains of Kansas City,*** **"A History and Love Affair"**, Copyright 1985, City of Fountains Foundation, The Lowell Press, Kansas City, MO

Symmes, Marilyn, Editor, ***Fountains, Splash and Spectacle,*** **"Water and Design from the Renaissance to the Present"**, Copyright 1998, Rizzoli International Publications, Inc., 300 Park Avenue South, New York, NY 10010

Sunset, ***Garden Pools, Fountains, & Waterfalls***, Lane Publishing Co., Menlo Park, CA 94025

Swindells, Phillip, ***Garden Pools, Waterfalls & Fountains***, Copyright 1987, Sterling Publishing Co., Inc., 387 Park Avenue South, New York, NY 10016-8810

II. KOI AND KOI PONDS

Cole, Peter, ***The Art of Koi Keeping, A Complete Guide***, Copyright 1990, Sterling Publishing Co., Inc., 387 Park Avenue South, New York, NY 10016-8810

James, Barry, ***A Fishkeeper's Guide to Koi***, Copyright 1985, Tetra Press, 201 Tabor Road, Morris Plains, NJ 07950

McDowall, Anne, Editor, ***The Tetra Encyclopedia of Koi***, Copyright 1989, Tetra Press, 201 Tabor Road, Morris Plains, NJ 07950

Wisner, Nancy Cooper and Simon, Frederick Albert, ***Keeping Koi***, Copyright1996, Sterling Publishing Co., Inc., 387 Park Avenue South, New York, NY 10016-8810

III. WATER GARDENS

Arnoux, Jean-Claude, ***The Ultimate Water Garden Book***, Copyright 1995, The Taunton Press, 63 South Main Street, Box 5506, Newtown, CT 06470-5506

Moody, Mary, ***Better Homes and Gardens, The Pleasure of Gardening, Creating Water Gardens***, Copyright 1993, Lansdowne Publishing Pty. Ltd., Sydney, NSW, 2000, Australia

Robinson, Peter, ***Pool and Waterside Gardening***, Copyright 1987, Timber Press, Inc., 9999 SW Wilshire, Portland, OR 97225

Robinson, Peter, ***The Water Garden, A Practical Guide to Planning and Planting***, (The Wayside Gardens Collection), Copyright 1995, Sterling Publishing Co., Inc., 387 Park Avenue South, New York, NY 10016-8810

Spier, Carol, ***For Your Garden, Water Gardens***, Copyright 1993, Michael Friedman Publishing Group, Inc., New York, NY 10010

Sunset, ***Water Gardens***, Copyright 1997, Lane Publishing Co., Menlo Park, CA 94025

Swindells, Phillip and Mason, David, ***The Complete Book of the Water Garden***, Copyright 1990, The Overlook NY 12498

Thompson, Paul, ***Water in Your Garden***, Copyright 1991, Lothian Publishing Co. Pty. Ltd., 11 Munro Street, Port Melbourne, Victoria, Australia 3207

Van Sweden, James, ***Gardening With Water***, Copyright 1989, Arpel Graphics, Inc., 32 East Micheltorena, Santa Barbara, CA 93101

IV. WATER RELATED

Amidon, Jane and Kiley, Dan, ***Dan Kiley, The Complete Works of America's Master Landscape Architect***, Copyright 1999, Little, Brown, and Company, Boston, New York, London

Brookes, John, ***Gardens of Paradise***, **"The History and Design of the Great Islamic Gardens"**, Copyright 1987, New Amsterdam, New York

Campion, Drew, ***The Book of Waves,*** Copyright, Arpel Graphics, Inc., 32 E. Micheltorena, Santa Barbara, CA 93101

Grant, Douglas M. and Dawson, Brian D., ***Isco Open Channel Flow Measurement Handbook***, Copyright 1995, Isco, Inc., P.O. Box 82531, Lincoln, NE 68501-2531

Leopold, Luna and Davis, Kenneth, ***Water***, Copyright 1966, Time, Inc., New York

Lyall, Sutherland, ***Designing the New Landscape***, Copyright 1991, Thames and Hudson, Ltd., London

Simonds, John Ormsbee, ***Landscape Architecture-A Manual of Planning and Design***, Copyright 1983, 1961, McGraw-Hill, Inc.

Tourbier, J. Toby and Westmacott, Richard, ***Lakes and Ponds***, Copyright 1992, The Urban Land Institute, 625 Indiana Avenue, NW, Washington, DC 20004

Walker, Theodore D., ***Site Design and Construction Detailing***, Copyright 1978, PDA Publishers Corp., 1725 E. Fountain, Mesa, AZ 85203

Westaway, C.R. and Loomis, A.W., Editors, ***Cameron Hydraulic Data***, Copyright 1981, Ingersoll-Rand, Woodcliff Lake, NJ 07675

PERIODICALS

Landscape Architecture, American Society of Landscape Architects, 636 Eye Street NW, Washington, DC 20001-3736

Landscape Architect and Specifier News, http://landscapeonline.com

Land Forum, Spacemaker Press, P.O. Box 2506, Washington, DC 20013, info@spacemakerpress.com

Water Shapes, Box 306, Woodland Hills, CA 91365

Pondkeeper, www.pondkeeper.com

WEBSITE BOOK SOURCES

www.amazon.com

www.barnesandnoble.com

www.abebooks.com

www.bibliofind.com

